sales@trfastenings.com
www.trfastenings.com

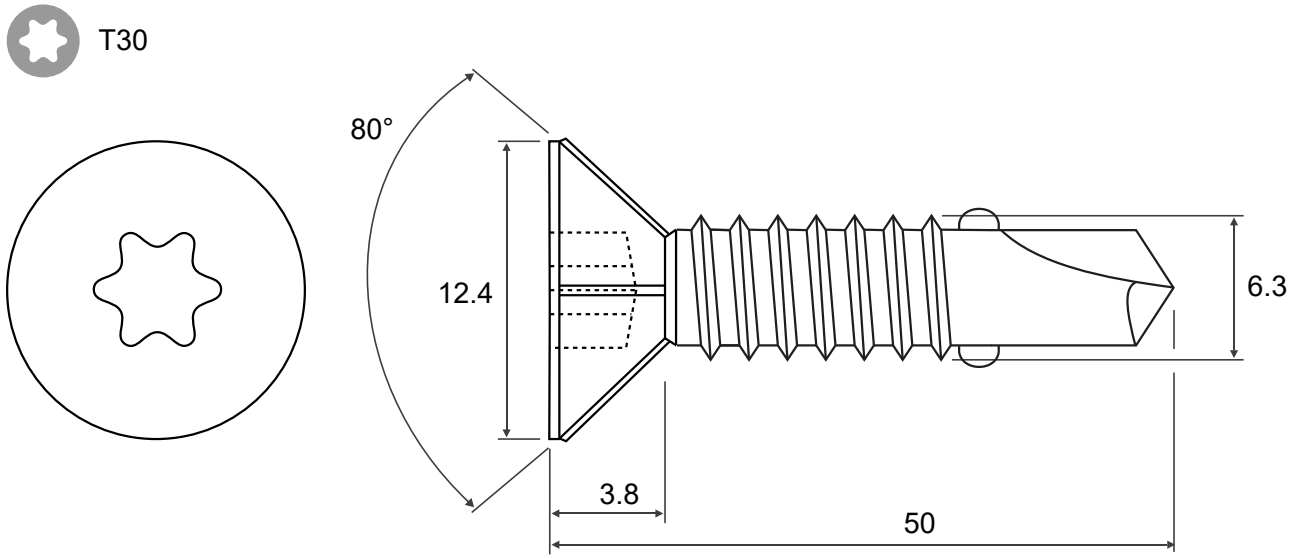

6.3mm x 50mm Ribbed Countersunk Head Recess T Drive Self Drilling Screw with Wings	Material	Steel	Customer Part No.	6.3 X 50 KTSTDX Z100 WINGED
~DIN 7504P	Finish	Zinc & Clear Cr3 De-embrittled	Web Ref No	TR00012272-103

© TR FASTENINGS LTD. 2020 THIS DRAWING IS THE PROPERTY OF TR FASTENINGS AND IS SUPPLIED IN CONFIDENCE, AND MAY NOT WHOLLY OR PARTIALLY BE COPIED, WITHOUT THE EXPRESSED AUTHORISATION OF TR FASTENINGS LTD.

UNCONTROLLED COPY

UNLESS OTHERWISE SPECIFIED : DIMENSIONS ARE IN MILLIMETERS