sales@trfastenings.com
www.trfastenings.com

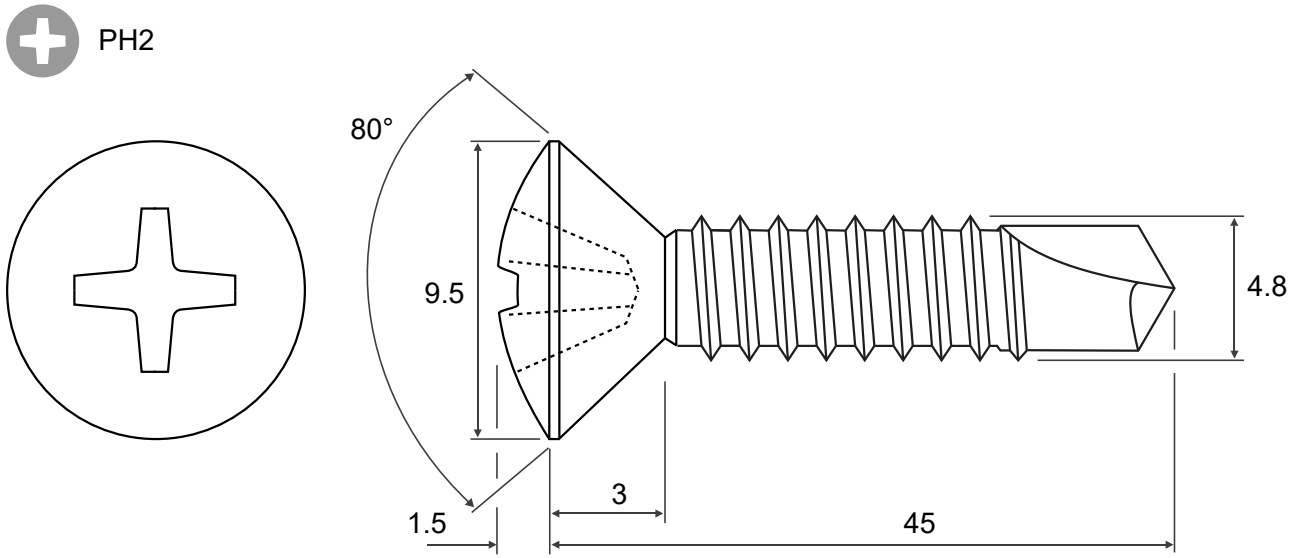

4.8mm x 45mm Raised Countersunk Head Cross Recess H Drive Self Drilling Screw	Material	Steel	Customer Part No.	4.8 X 45 IPSTDX Z100 DIN7504
DIN 7504Q	Finish	Zinc & Clear Cr3 De-embrittled	Web Ref No	TR00012245-103

© TR FASTENINGS LTD. 2020 THIS DRAWING IS THE PROPERTY OF TR FASTENINGS AND IS SUPPLIED IN CONFIDENCE, AND MAY NOT WHOLLY OR PARTIALLY BE COPIED, WITHOUT THE EXPRESSED AUTHORISATION OF TR FASTENINGS LTD.

UNCONTROLLED COPY

UNLESS OTHERWISE SPECIFIED : DIMENSIONS ARE IN MILLIMETERS