May.1.2020 Copyright 2020 HIROSE ELECTRIC CO., LTD. All Rights Reserved.
In case of consideration for using Automotive equipment / device which demand high reliability, kindly contact our sales window correspondents.

	COUNT	DESCRIPTION OF REVISIONS	BY	CHKD	DATE		COUNT	DESCRIPTION OF REVISIONS	BY	CHKD	DATE
△					. .	△					. .
△					. .	△					. .
△					. .	△					. .

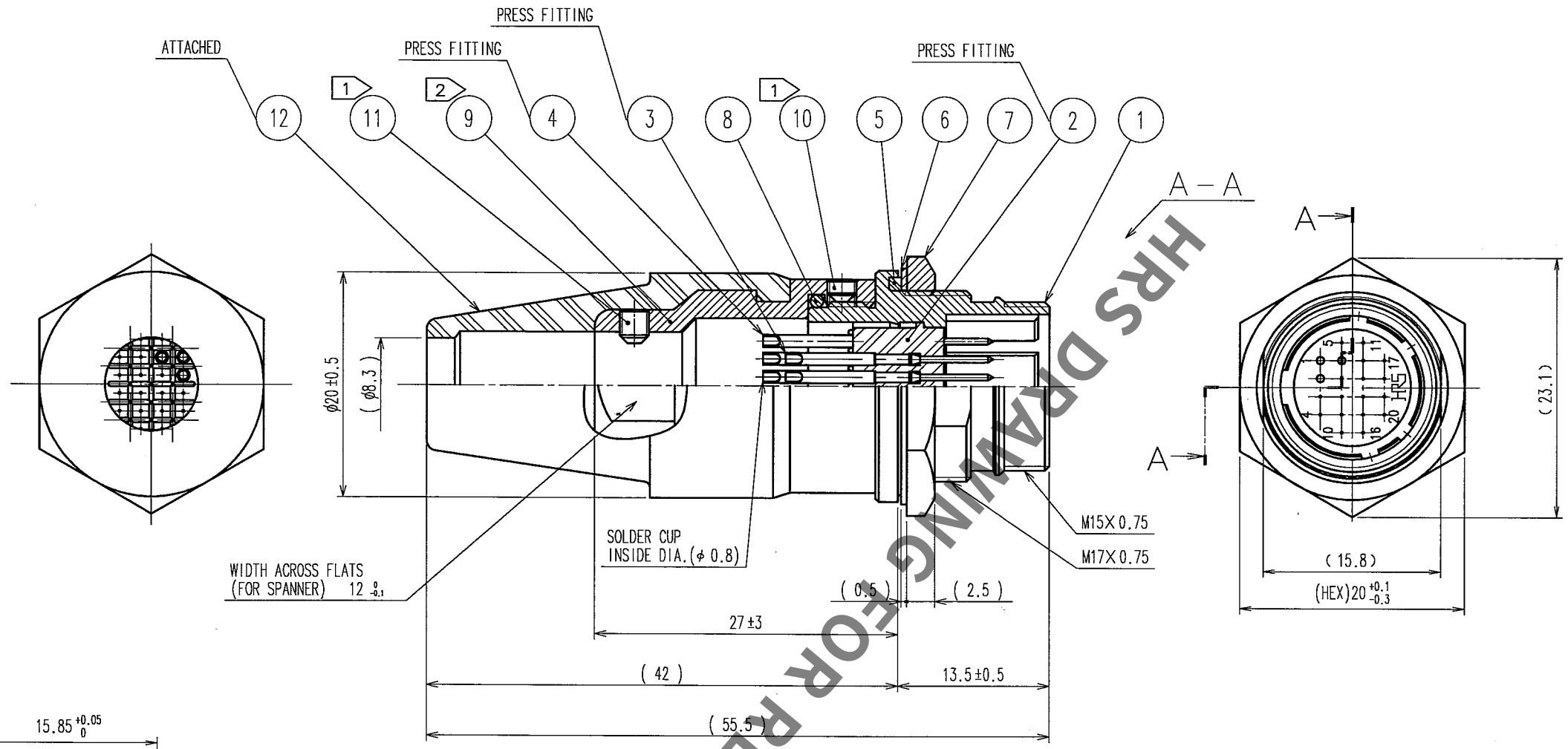

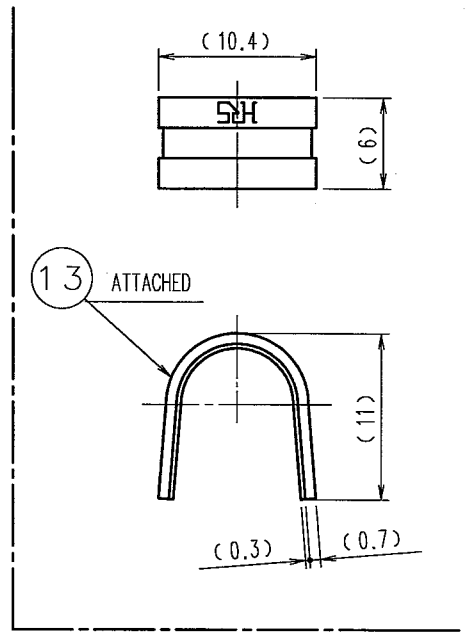

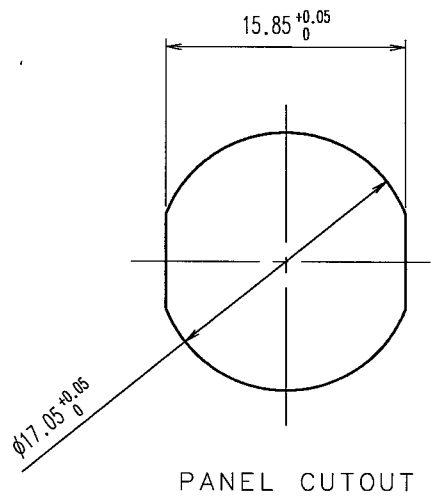

PANEL CUTOUT
t=1～3

NOTE 1 ACROSS FLATS HEXAGON HEAD OF REF.NO.⑩ AND ⑪ :1.27
THE RECOMMENDED CLAMP TORQUE, REF.NO. ⑩ AND ⑪ :0.3-0.4N・m.
2 THE RECOMMENDED CLAMP TORQUE, REF.NO.⑨:2N・m.
LOCTITE 242,HENKEL JAPAN OR EQUIVALENT IS RECOMMENDED TO PREVENT REF.NO⑦,⑩ , ⑪ FROM LOOSENING.
3 ONE EXAMPLE OF THE ROTATION OF REF.NO.①TO REF.NO.⑨IS SHOWN.

NO.	MATERIAL	FINISH, REMARKS	NO.	MATERIAL	FINISH, REMARKS
7	BRASS	NICKEL PLATING			
6	BRASS	NICKEL PLATING	13	BRASS	
5	SIR	(BLACK)	12	NBR	(BLACK)
4	BRASS	SILVER PLATING 2μm min.	11	STAINLESS STEEL	NICKEL PLATING JISB1177 HEXAGON SOCKET SET SCREW M2.6×0.45×3
3	BRASS	SILVER PLATING 2μm min.	10	STAINLESS STEEL	NICKEL PLATING JISB1177 HEXAGON SOCKET SET SCREW M2.6×0.45×2
2	PBT	(BLACK) UL94V-0	9	BRASS	NICKEL PLATING
1	ZINC ALLOY	NICKEL PLATING	8	SIR	(BLACK)

CODE NO.(OLD)	DRAWN	DESIGNED	CHECKED	APPROVED	RELEASED
	J.Komatsu '06.02.01	E.Kunii 06 02 01	/ . .	M.Sato 06.02.01	

SCALE 2 : 1	DRAWING NO. EDC3-045418-73	PART NO. HR22-12TJD-20P(73)
UNITS mm	HRS HIROSE ELECTRIC CO.,LTD.	CODE NO. CL122-0022-9-73 1/1

FORM NO.229

TO
R

HRS DRAWING FOR REFERENCE