Jun.1.2020 Copyright 2020 HIROSE ELECTRIC CO., LTD. All Rights Reserved.
In case of consideration for using Automotive equipment / device which demand high reliability, kindly contact our sales window correspondents.

	COUNT	DESCRIPTION OF REVISIONS	BY	CHKD	DATE		COUNT	DESCRIPTION OF REVISIONS	BY	CHKD	DATE
△					. .	△					. .
△					. .	△					. .
△					. .	△					. .

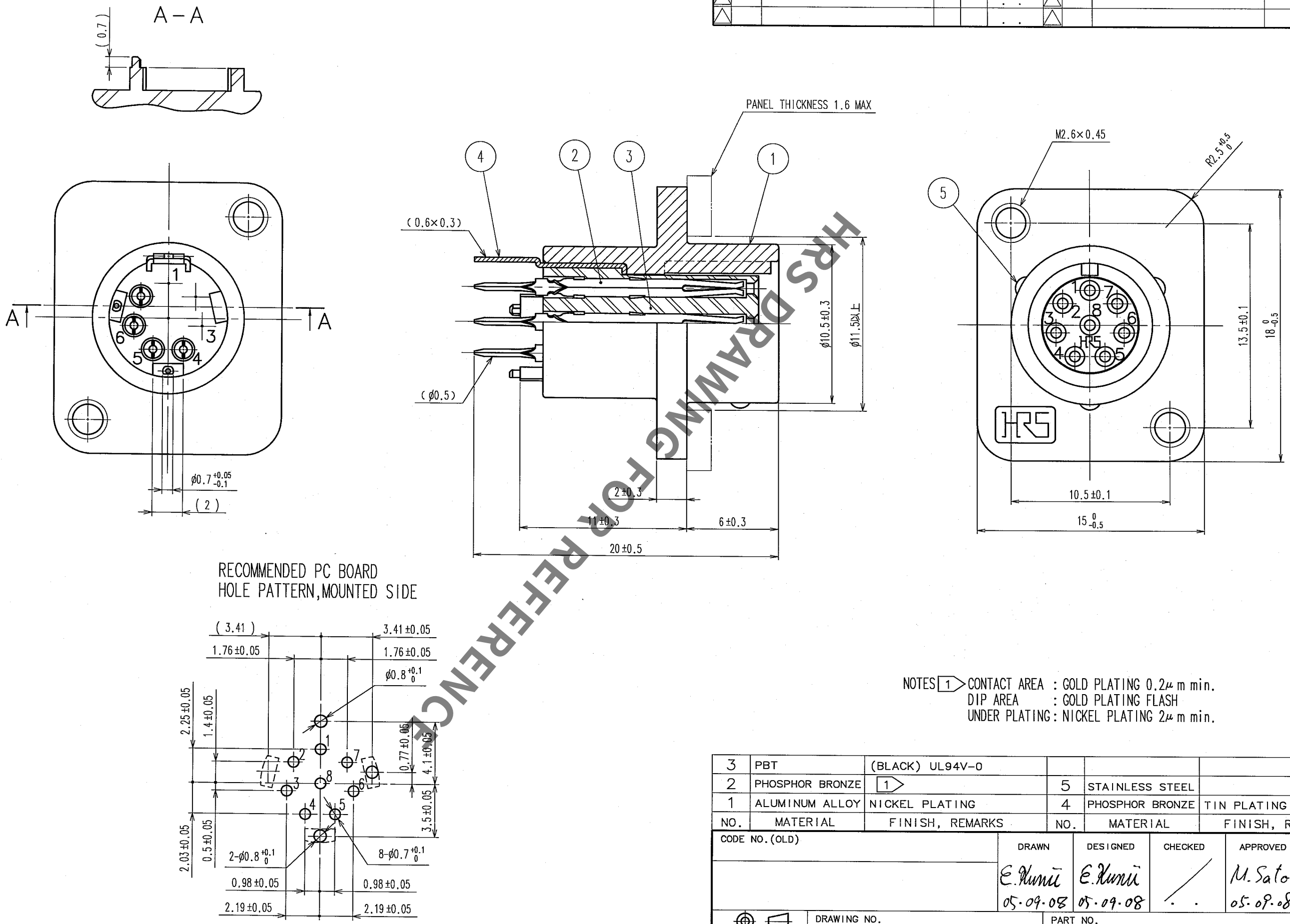

HRS DRAWING FOR REFERENCE

NOTES 1 CONTACT AREA : GOLD PLATING 0.2μm min.
DIP AREA : GOLD PLATING FLASH
UNDER PLATING : NICKEL PLATING 2μm min.

NO.	MATERIAL	FINISH, REMARKS	NO.	MATERIAL	FINISH, REMARKS
3	PBT	(BLACK) UL94V-0			
2	PHOSPHOR BRONZE	1	5	STAINLESS STEEL	
1	ALUMINUM ALLOY	NICKEL PLATING	4	PHOSPHOR BRONZE	TIN PLATING

CODE NO.(OLD)	DRAWN	DESIGNED	CHECKED	APPROVED	RELEASED
	E.Kunii 05.09.08	E.Kunii 05.09.08	. .	M.Sato 05.09.08	. .

SCALE 4 : 1	DRAWING NO. EDC3-049139-71	PART NO. MXR-8R-8SA(71)
UNITS mm	HRS HIROSE ELECTRIC CO., LTD	CODE NO. CL127-0102-8-71 1/1

TO
R

FORM NO.229