Jun.1.2020 Copyright 2020 HIROSE ELECTRIC CO., LTD. All Rights Reserved.
In case of consideration for using Automotive equipment / device which demand high reliability, kindly contact our sales window correspondents.

	COUNT	DESCRIPTION OF REVISIONS	BY	CHKD	DATE		COUNT	DESCRIPTION OF REVISIONS	BY	CHKD	DATE
△					. .	△					. .
△					. .	△					. .
△					. .	△					. .

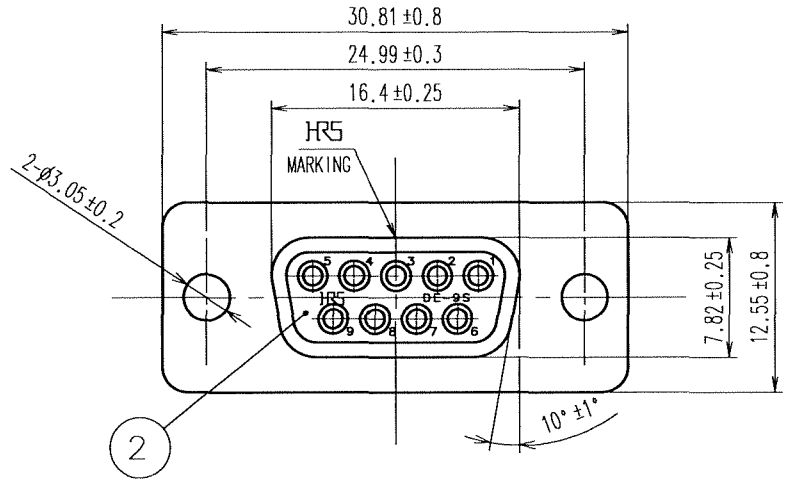

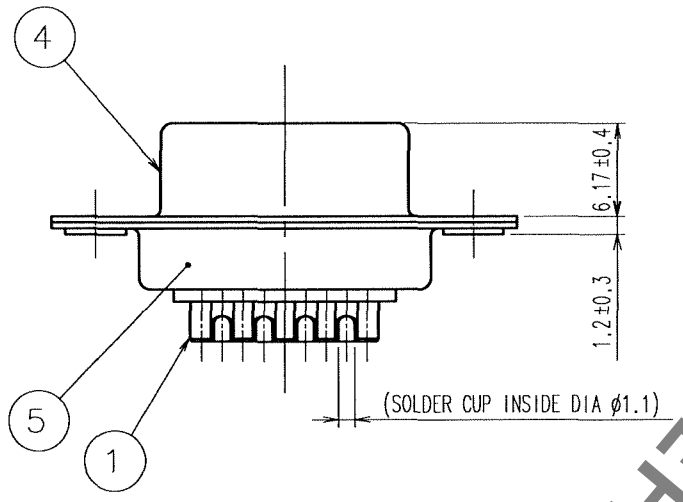

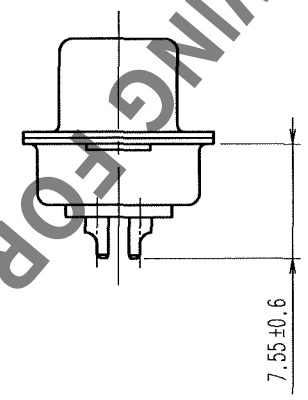

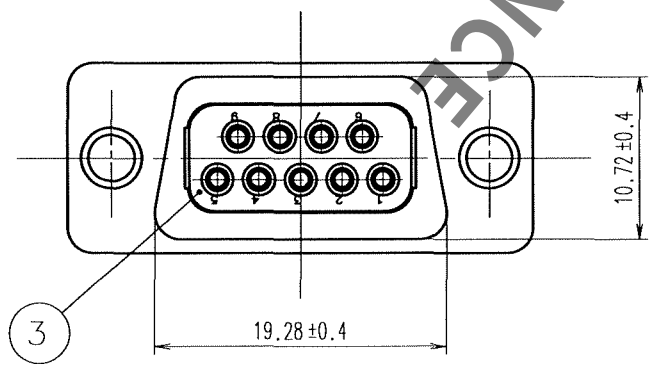

PANEL CUTOUT

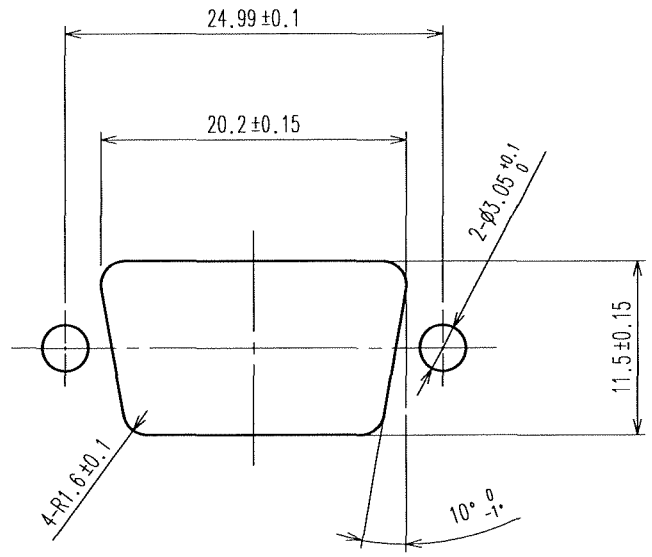

NOTE 1. USE SOLDERING IRON OF 40W MAX.
OPERATION PERIOD SHALL BE 4sec MAX.

HRS DRAWING FOR REFERENCE

NO.	MATERIAL	FINISH, REMARKS	NO.	MATERIAL	FINISH, REMARKS
2	PBT	UL94V-0 (BLACK)	5	STEEL	NICKEL PLATING
1	PHOSPHOR BRONZE	SELECTIVE GOLD PLATING 0.2 μm	4	STEEL	NICKEL PLATING
			3	PBT	UL94V-0 (BLACK)

CODE NO.(OLD)	DRAWN	DESIGNED	CHECKED	APPROVED	RELEASED
	M. Itano '06·02·13	F. Foriguchi '06·02·13	Y. Enami 06·02·13	H. Miura '06·02·13	. .

SCALE 2 : 1
UNITS mm

DRAWING NO. EDC3-009502-01

PART NO. HDEB-9S(05)

HRS HIROSE ELECTRIC CO., LTD

CODE NO. CL211-0233-9-05

1/1

TO
Q1

FORM NO.229