Jun.1.2020 Copyright 2020 HIROSE ELECTRIC CO., LTD. All Rights Reserved.
In case of consideration for using Automotive equipment / device which demand high reliability, kindly contact our sales window correspondents.

	COUNT	DESCRIPTION OF REVISIONS	BY	CHKD	DATE		COUNT	DESCRIPTION OF REVISIONS	BY	CHKD	DATE
△					. .	△					. .
△					. .	△					. .
△					. .	△					. .

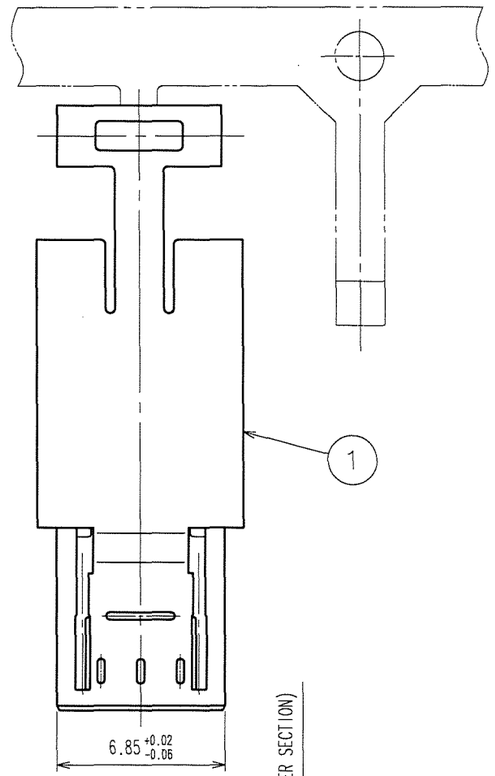

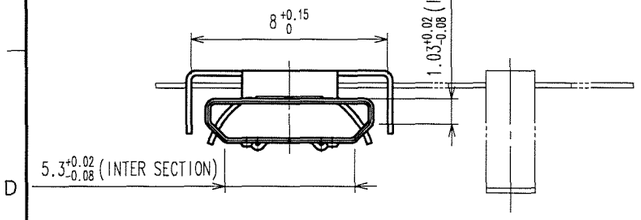

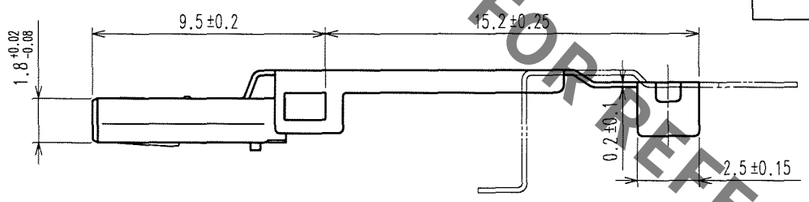

1 Fig - 1 REELING(FREE)

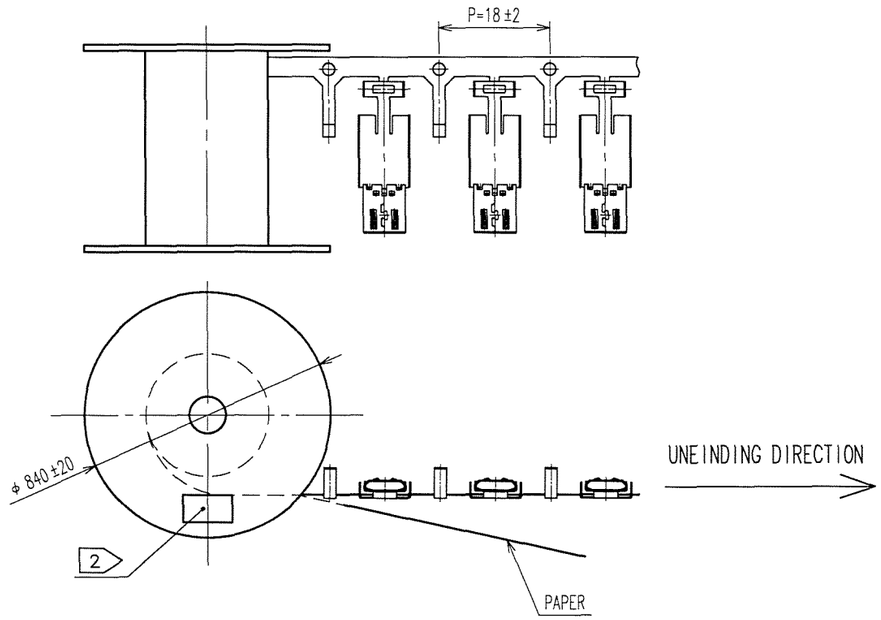

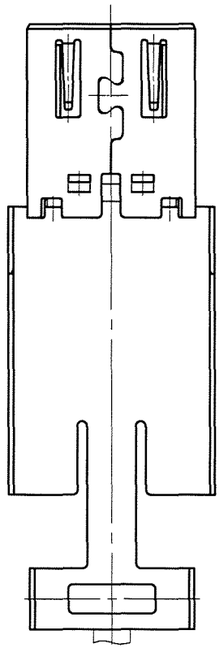

3 Fig - 2 CUT OFF A CAREER(FREE)

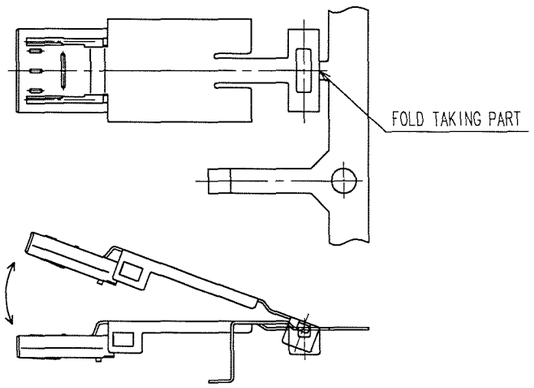

HRS DRAWING FOR REFERENCE

NOTES
1. THIS IS DELIVERED BY A REEL .QTY:4000PCS
2. SHOWN ON A REEL AND A BOX IS ; " PART No.","CODE No.","LOT No.","QTY"
3. CUT OFF CAREER AS SHOWN IN Fig-2.

NO.	MATERIAL	FINISH, REMARKS	NO.	MATERIAL	FINISH, REMARKS
			1	STAINLESS STEEL	

CODE NO.(OLD)	DRAWN	DESIGNED	CHECKED	APPROVED	RELEASED
	M.Shimoyama 07.1.30	M.Shimoyama 07.1.30	R.Koyama 07.01.31	07.01.31	. .

SCALE 4 : 1	DRAWING NO. EDC3-126087	PART NO. ZX64-B-SLDA
UNITS mm	HRS HIROSE ELECTRIC CO., LTD	CODE NO. CL242-0013-0 1/1

FORM NO.229

TO