PART NO.	"A" ±0.5 [.02]	"B" ±1.0 [.04]	"C" REF	"D" REF	"E" ±0.5 [.02]	CUSHION THICKNESS (LATCH) ±0.4 [.015]	CUSHION THICKNESS (BASE) ±0.4 [.015]
FCWSF-29-19	31.5 [1.24]	45.1 [1.78]	7.7 [.30]	11.1 [.44]	18.9 [.74]	3.3 [.13]	3.3 [.13]
FCWSF-30-19	31.6 [1.24]	45.5 [1.79]	9 [.35]	13.1 [.52]	19.1 [.75]		4.8 [.19]
FCWSF-40-19	39.3 [1.55]	53 [2.09]	9.3 [.37]	13.4 [.53]			
FCWSF-50-19	63.2 [2.49]	77.2 [3.04]	9.1 [.36]	13.2 [.52]			

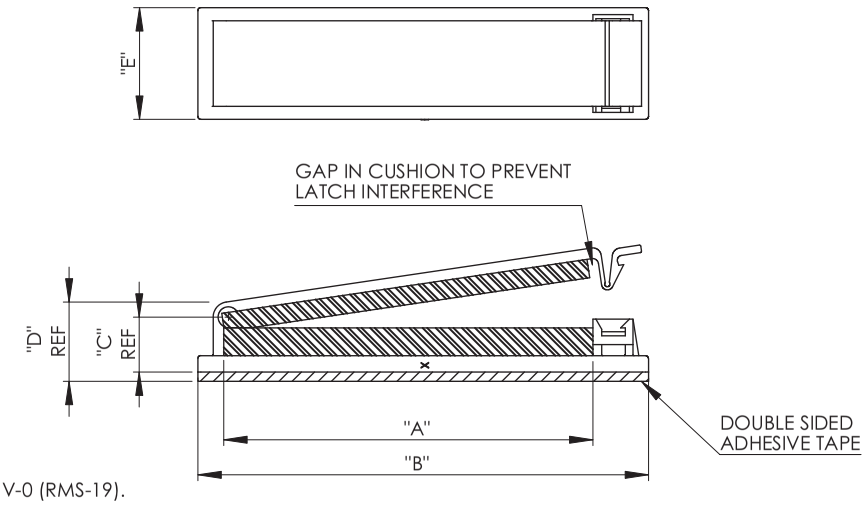

NOTES:
1. MATERIAL: NYLON 6/6 UL 94 V-0 (RMS-19).
2. COLOR: NATURAL.
3. TAPE: 1.6 [1/16] THICK, DOUBLE SIDED ADHESIVE (RMS-350).
4. CUSHION: ADHESIVE BACKED V-0 SILICONE FOAM (RMS-135). COLOR: GRAY.
5. ALTERNATE UNITS FOR REFERENCE ONLY
6. WHEN CLOSED, SLIGHT GAP MAY EXIST BETWEEN FOAM.

REV.	DESCRIPTION	ENGR.	DATE
A	RELEASED FOR PRODUCTION	SK	10/05/09

TITLE: FLAT CABLE CLAMP WITH SILICONE FOAM

DWG IN MM [IN]

CREATED USING SOLIDWORKS

TOLERANCES UNLESS NOTED
0~10=±0.1
10.01~30=±0.3
30.01~50=±0.5
ANG.=±1°

FILE #: FCWSF | DWN: R.D.G. | APP: R.D.G. | FINAL

SHEET: 1 OF 1 | SHEET SIZE: A | DT: 10/01/09 | CHKD: SJ

RE: RICHCO, INC.
--

RICHCO, INC.
ENG@RICHCO-INC.COM
(773) 539-4060

PART # SEE TABLE

PRINT TYPE CA