PART NO.	TERMINAL TYPE	WIRE DIA.	"A"	"B"	"C"	"D"	"E"	"F"	"G"	"H"	"J"	"K"	U.L. CAT. NO.
OS-187	STRAIGHT TYPE 187 SERIES	9/64 (3.6)	.346 (8.8)	.240 (6.1)	.138 (3.5)	.102 (2.6)	.268 (6.8)	.039 (1.0)	.153 (3.9)	.594 (15.1)	.071 (1.8)	.295 (7.5)	51A
OS-250	STRAIGHT TYPE 250 SERIES	5/32 (3.8)	.378 (9.6)	.315 (8.0)	.134 (3.4)	.110 (2.8)	.315 (8.0)	.039 (1.0)	.197 (5.0)	.728 (18.5)	.075 (1.9)	.378 (9.6)	50B

AVAILABLE BY SPECIAL ORDER ONLY

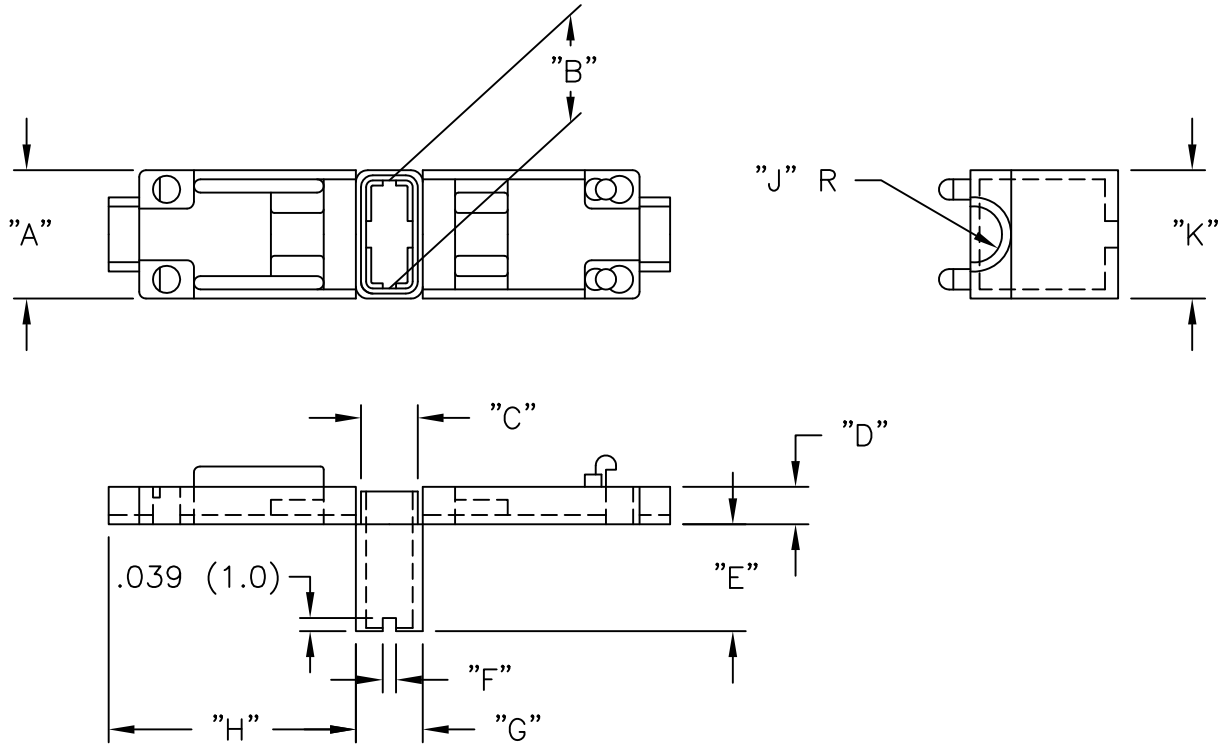

NOTES:
1. MATERIAL: NYLON 6, (RMS-120).
2. COLOR: NATURAL.

REV	DESCRIPTION	ENGR DATE
E	SEE CO 200344 FOR CHANGES	SK 03.18.09
D	SEE CO 200041 FOR CHANGES	SK 09.28.07
C	SEE ECN #913 FOR CHANGES	SK 01.12.05
B	RMS-120 WAS RMS-61; CHANGED FILE NO.	SM 10.25.01
A	RMS-61 WAS RMS-28	PB 102794

TITLE: "ONE TOUCH" SLEEVE INSULATOR (OS SERIES)

DWG IN IN (MM)

TOLERANCES UNLESS NOTED
.XX=±.010
.XXX=±.005
FRAC=±1/64
ANG=±1°

FILE # OS
MAT'L: SEE NOTES
RE: RICHCO, INC.

DWN: P.B. APP:
DT: 05-10-94 DT:

RICHCO INC.
PO BOX 804238,CHICAGO,60680
(773) 539-4060

FINAL

PART # SEE TABLE

PRINT TYPE CA