Part Number	DIM "A"	DIM"B"	DIM"C"	DIM"D"	DIM"E"	DIM"F"	MOUNTING
WSLTB-01A-19A-RT	.19 [4.8]	.42 [10.7]	.41 [10.4]	.66 [16.8]	.63 [16.0]	.50 [12.7]	ACRYLIC ADHESIVE
WSLTB-01A-19	.19 [4.8]	.42 [10.7]	.38 [9.6]	.66 [16.8]	.63 [16.0]		SRX-3XXX RIVET
WSLTB-02A-19A-RT	.39 [10.0]	.64 [16.3]	.61 [15.5]	.88 [22.4]	.85 [21.5]		ACRYLIC ADHESIVE
WSLTB-02A-19	.39 [10.0]	.64 [16.3]	.58 [14.7]	.88 [22.4]	.85 [21.5]		SRX-3XXX RIVET

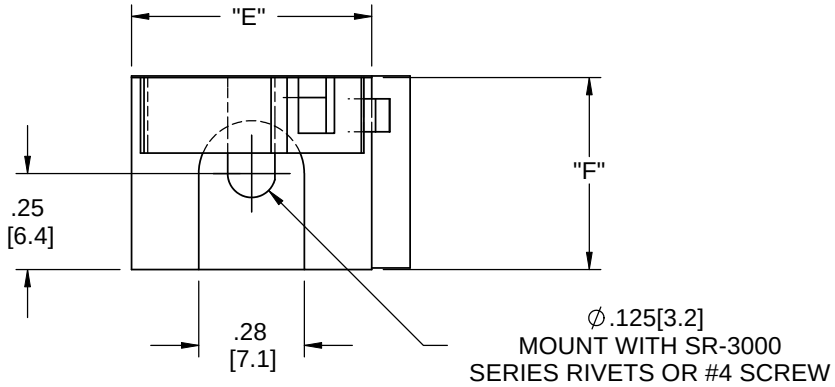

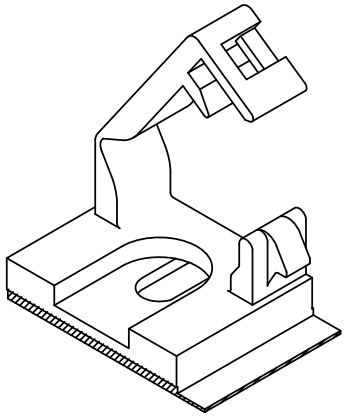

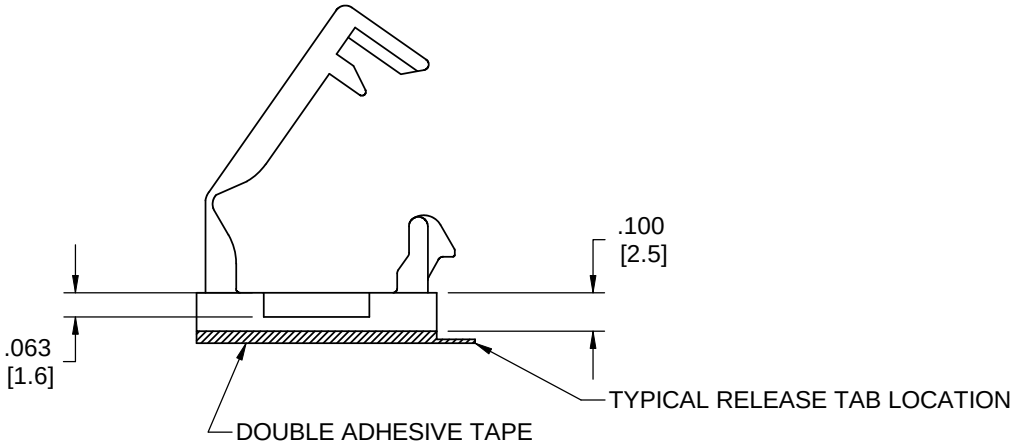

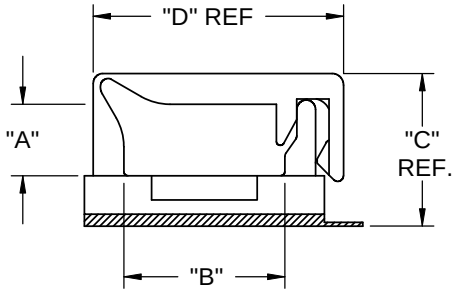

NOTES:
1. MATERIAL:FLAME RETARDANT V-0 NYLON (RMS-19)
   V-2 NYLON (RMS-01) BY SPECIAL REQUEST
2. COLOR: NATURAL
3. ADHESIVE: 1/32 ACRYLIC ADHESIVE (RMS-15).
4. TYPICAL OVERHANG OF TAPE FROM EDGE OF BASE TO BE .079 [2] MAX.

REV.	DESCRIPTION	ENGR.	DATE
C	SEE CO 200270 FOR CHANGES	SK	10/29/08
B	SEE CO 200096 FOR CHANGES	SK	01/02/08
A	RELEASED FOR PRODUCTION	SM	05.21.03

TITLE: WIRE SADDLE LOCKING TOP ON BASE

DWG IN IN [MM]

CREATED USING SOLIDWORKS

TOLERANCES UNLESS NOTED
.XX=±.010
.XXX=±.005
FRAC.=±1/64
ANG.=±1°

FILE #: WSLTB
SHEET: 1 OF 1
SHEET SIZE: A
DWN: DLC
DT: 3/20/03
APP: DLC
CHKD: DJZ

FINAL

RE: RICHCO-INC
--

RICHCO, INC.
ENG@RICHCO-INC.COM
(773) 539-4060

PART # SEE CHART

PRINT TYPE CA