REV.	MODIFICATION.	DATE	DRN
01	PRODUCTION RELEASE	26/09/08	MT
02	CO2010436	10/10/08	MT

Standard Material: UL94 V2 Nylon 6/6, RMS-01 Color: Natural	Figure	Min. Loop Tensile Strength kg (lb)	"L" Length Ref.	Max. Bundle Diameter	"W" Width	Mounting Hole Diameter	Panel Thickness	Color & Material Variations Suffix: UL94 V0 Nylon 6/6, RMS-19 Color: Natural	UL94 V2 Nylon 6/6, RMS-01 Color: Black	High Temperature Nylon 4/6, RMS-109 Color: Natural	UV Stabilized Nylon 6/6, RMS-46A Color: Black
								Replace -01 with -V0	Add BK	Add -HT	Add -UVB
WIT-18RA-01	1	8 [18]	109 [4.29]	21 [.83]	2.5 [.10]	4.8 [.19]	1.6 [.06]	-	SPECIAL	-	SPECIAL
WIT-50SA-01		22 [50]	133 [5.24]	23 [.91]	4.8 [.19]	6.4 [.25]		SPECIAL		SPECIAL	
WIT-50SRA-01			173 [6.81]	36 [1.42]							
WIT-50RA-01			198 [7.80]	43 [1.69]							
WIT-50SA-1-01	2		133 [5.24]	23 [.91]		6.4 - 6.8 [.25 - .27]	0.8 - 2 [.03 - .08]				
WIT-50SRA-1-01			173 [6.81]	36 [1.42]							
WIT-50RA-1-01			198 [7.80]	43 [1.69]							

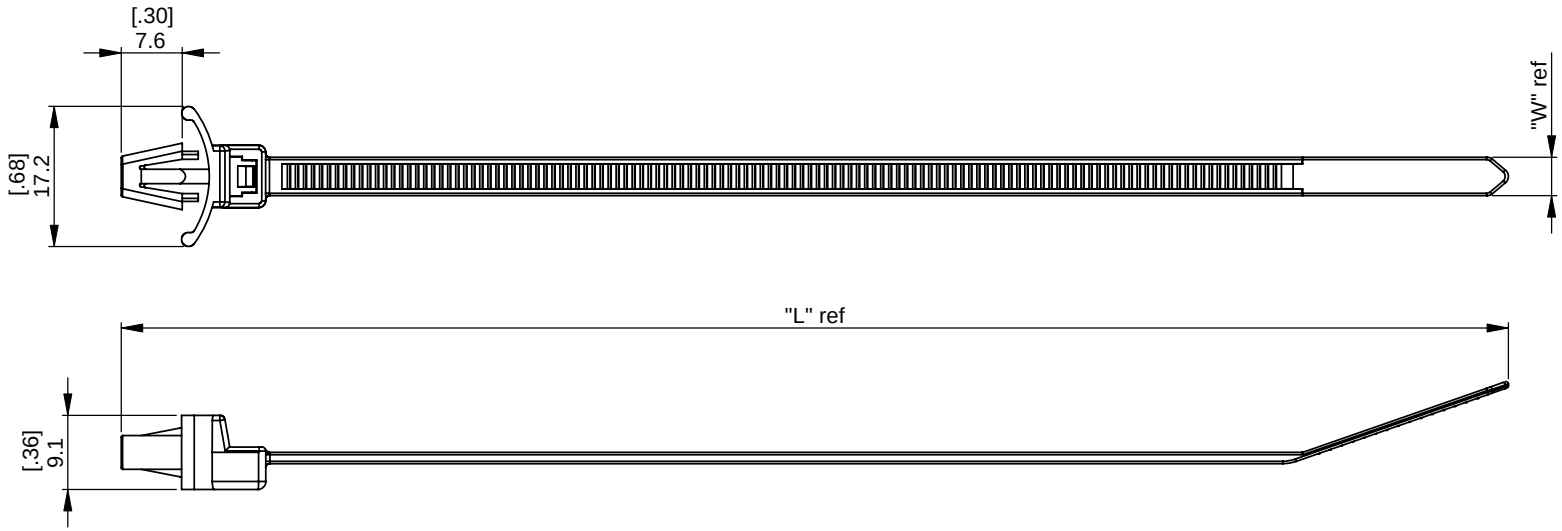

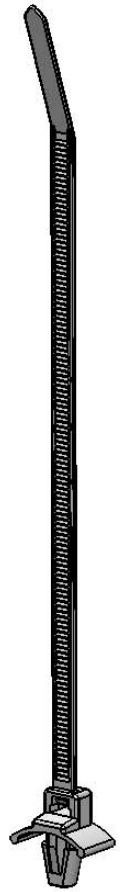

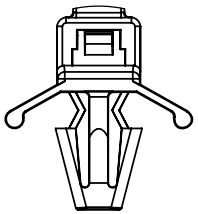

FIGURE-1

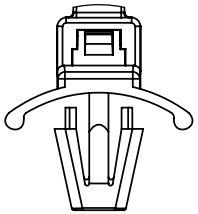

FIGURE-2

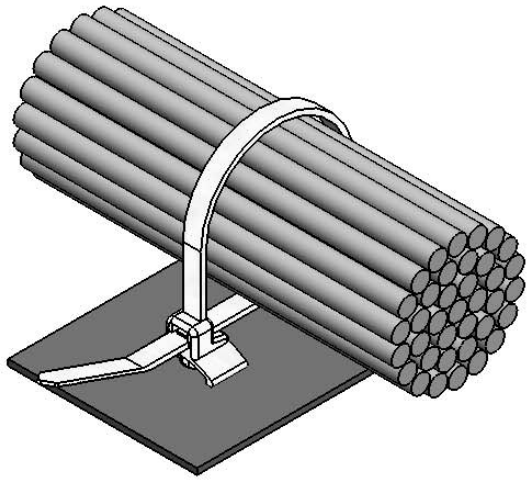

INFORMATION CONTAINED IN THIS DOCUMENT IS CONFIDENTIAL TO RICHCO INTERNATIONAL Co. Ltd. AND MAY NOT BE DISCLOSED OR REPRODUCED IN WHOLE OR PART WITHOUT THEIR WRITTEN CONSENT.

Richco

ALL DIMENSIONS IN mm
GENERAL TOLERANCES ±0.25
UNLESS OTHERWISE STATED
1 DECIMAL PLACE ±0.25
2 DECIMAL PLACES ± 0.10
ANGULAR ±1°

THIRD ANGLE

MATERIAL: NYLON 6/6 UL94 V-2 (RMS-01)	COLOUR: NATURAL
DESCRIPTION: WIT ARROWHEAD TIES	PART No: SEE TABLE
DRG No: 08-100 / NPR No: NPR2007-458 IT08-0011	Mass:(g) / SHEET SIZE A3
DRN MT / DATE 26/09/08 / CHKD JK / DATE 26/09/08	SCALE NTS / SHEET No. 1 OF 1

FORM No. 0178/00