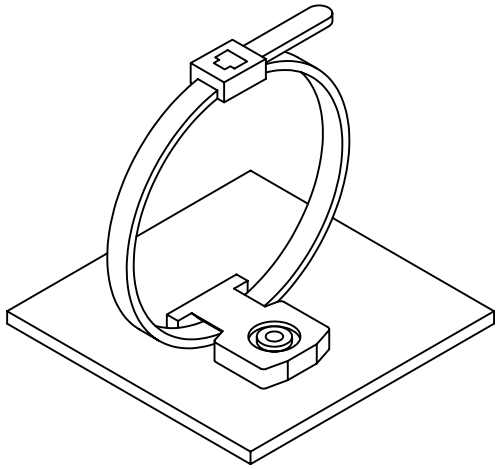

TYPICAL APPLICATION

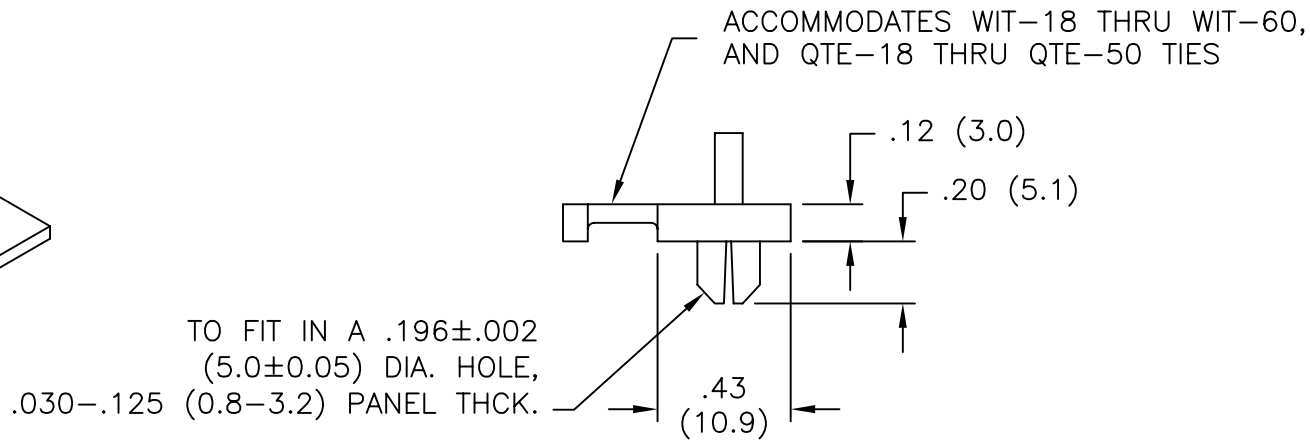

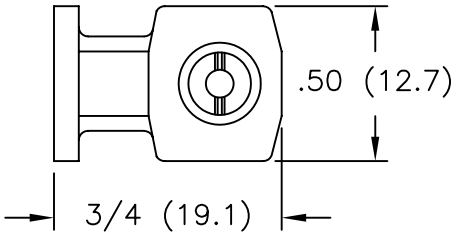

NOTES:
1. MATERIAL: NYLON 6/6, (RMS–01).
2. COLOR: YELLOW.
   COLOR BLACK AVAILABLE BY SPECIAL ORDER.
   TO ORDER, ADD "BK" TO THE END OF PART NO.

REV	DESCRIPTION	ENGR DATE
E	SEE ECN #1188 FOR CHANGES	SK 06.29.06
D	SEE ECN #1124 FOR CHANGES	SK 01.24.06
C	UPDATED NOTES AND CHANGED FILE NO.	SM 06.12.02
B	CABLE TIE NOTE UPDATED TO GRAPH	JL 01.04.00
A	NOTE 3 ADDED, DIM .196 WAS .202, DIM 3/4 WAS .74, DIM .06 WAS .12, DIM .12 ADDED ISO. ADDED; P/N FTH–22–01 WAS FTH–22	PB 08.01.94

TITLE: WIRE TIE HOLDER

DWG IN IN (MM)

TOLERANCES UNLESS NOTED
.XX=±.010
.XXX=±.005
FRAC=±1/64
ANG=±1°

FILE # FTH–22
MAT'L: SEE NOTES
RE: RICHCO, INC.

DWN: P.B.
DT: 06–09–94

APP:
DT:

RICHCO INC.
PO BOX 804238,CHICAGO,60680
(773) 539–4060

FINAL

PART # FTH–22–01

PRINT TYPE CA