MFG. ENG.	APPROVED BY:	DATE:	QA	APPROVED BY:	DATE:

CUSTOMER PRINT

PART NUMBER: SF4282-XXSG-3ES

NOTES:

1. FINISHED CONNECTOR ASSEMBLIES ARE PACKED INTO A PARTITION BOX, 25 PIECES PER BOX. BOX IS LABELED WITH CONXALL PART NUMBER AND DATE CODE.
2. HEX NUT IS BULK PACKED IN POLY BAG. O-RING AND PROTECTIVE CAP ARE ASSEMBLED ONTO THE CONNECTOR.
3. TERMINATING END OF CONNECTOR IS FILLED WITH BLACK EPOXY.
4. MASTER KEY IS AT 12 O'CLOCK.
5. PANEL MOUNT FLAT IS AT 9 O'CLOCK.
6. SOLDER CUPS TO FACE MASTER KEY OF INSERT.
7. MATERIALS:
   HEX NUT & PANEL HOUSING- COPPER ALLOY, NICKEL PLATED PER MIL-C-26074
   PROTECTIVE CAP- ELASTOMER, BLACK
   SOCKET INSERT- THERMOPLASTIC, BLACK
   O-RING- ELASTOMER, BLACK
   CONTACTS- COPPER ALLOY, GOLD PLATED PER MIL-G-45204 OVER NICKEL PER QQ-N-290

	POSITIONS											
PART NUMBER	POS 1	POS 2	POS 3	POS 4	POS 5	POS 6	POS 7	POS 8	POS 9	POS 10	POS 11	POS 12
SF4282-2SG-3ES	---	---	---	OPEN	---	---	---	---	OPEN	---	---	---
SF4282-3SG-3ES	OPEN	---	OPEN	---	---	---	---	---	---	---	---	OPEN
SF4282-4SG-3ES	OPEN	---	OPEN	---	OPEN	---	---	OPEN	---	---	---	---
SF4282-5SG-3ES	---	OPEN	---	OPEN	---	OPEN	OPEN	---	OPEN	---	---	---
SF4282-6SG-3ES	OPEN	OPEN	---	OPEN	OPEN	---	OPEN	OPEN	---	---	---	---
SF4282-7SG-3ES	OPEN	OPEN	OPEN	OPEN	---	OPEN	OPEN	---	OPEN	---	---	---
SF4282-8SG-3ES	OPEN	---	OPEN	OPEN	OPEN	OPEN	OPEN	OPEN	OPEN	---	---	---
SF4282-9SG-3ES	OPEN	OPEN	OPEN	OPEN	OPEN	OPEN	OPEN	OPEN	OPEN	---	---	---
SF4282-10SG-3ES	OPEN	OPEN	OPEN	OPEN	OPEN	OPEN	OPEN	OPEN	OPEN	OPEN	---	---
SF4282-11SG-3ES	OPEN	OPEN	OPEN	OPEN	OPEN	OPEN	OPEN	OPEN	OPEN	OPEN	OPEN	---
SF4282-12SG-3ES	OPEN	OPEN	OPEN	OPEN	OPEN	OPEN	OPEN	OPEN	OPEN	OPEN	OPEN	OPEN
SF4282-XXSG-3ES												

NUMBER OF CONTACTS
(2 THROUGH 12)

"---" HALF CLOSED FROM MATING END

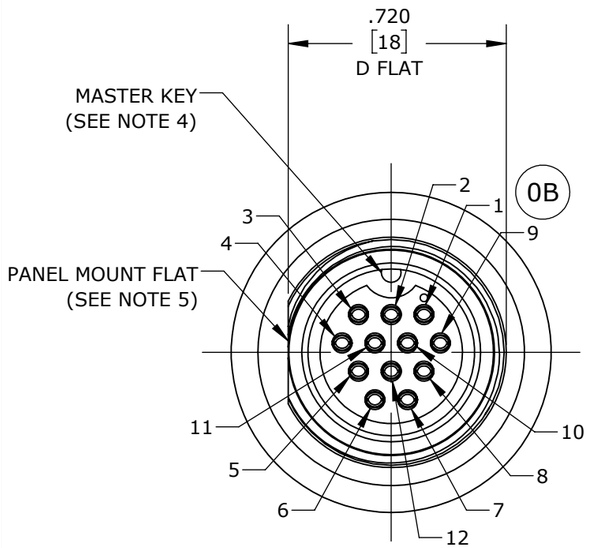

FACE VIEW
(SF4282-12SG-3ES SHOWN)

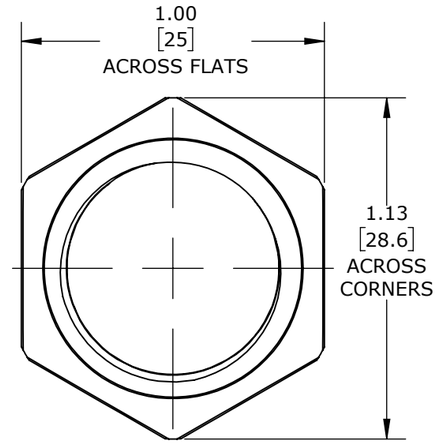

HEX NUT
(UNASSEMBLED)

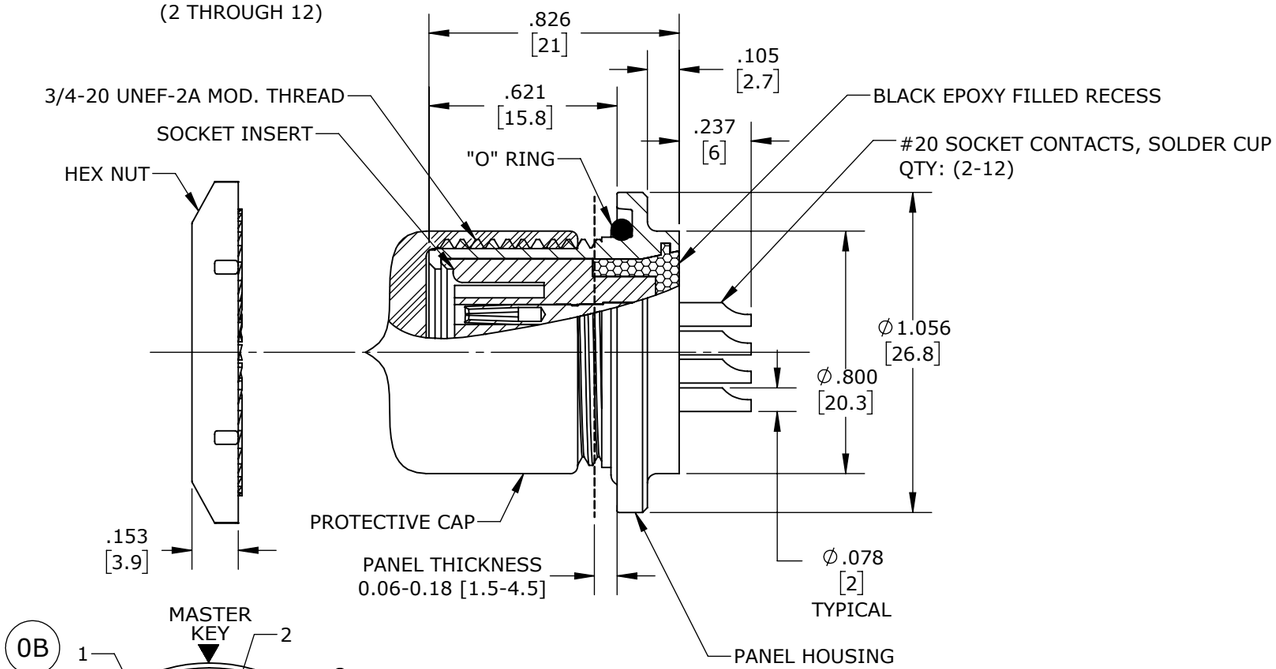

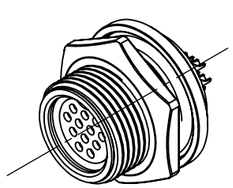

ASSEMBLED VIEW
(SCALE 1:1)
(SF4282-12SG-3ES SHOWN
WITHOUT PROTECTIVE CAP)

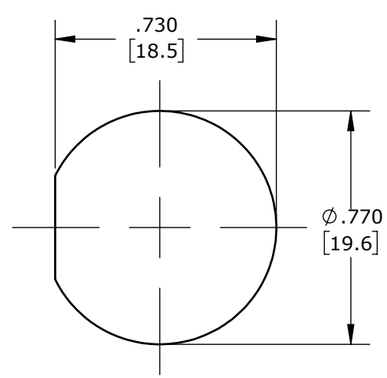

RECOMMENDED PANEL CUT-OUT

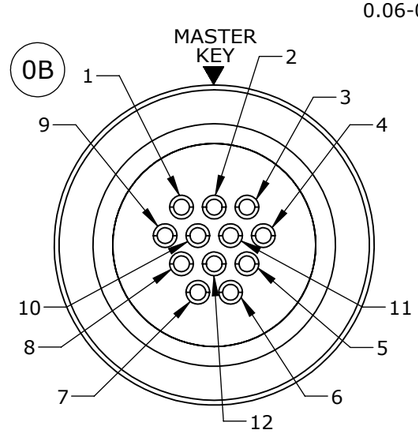

WIRE VIEW
(SF4282-12SG-3ES SHOWN)

DIMENSIONS IN BRACKETS [] ARE METRIC, mm.

RoHS COMPLIANT

REV.	INIT.	DATE	DESCRIPTION
0C	JGK	12/20/18	REMOVED "E" DESIGNATION IN ALL P/N'S.
0B	JGK	03/23/18	UPDATED HOLE PIN-OUT PATTERN TO MATCH CON-X PANEL PIN-OUT.
0A	JGK	12/05/17	DRAWING CREATED FOR PROJECT #15019.

ALL INFORMATION ILLUSTRATED IS THE PROPERTY OF "CONXALL CORPORATION." UNAUTHORIZED DUPLICATION OR DISTRIBUTION OF THIS DOCUMENT IS PROHIBITED.

ALL UNITS ARE IN FEET, INCHES, FRACTION OF INCHES AND DECIMALS.

UNLESS OTHERWISE SPECIFIED TOLERANCES:
3 PLACE DECIMALS ±.005
ANGLES ±1°
FRACTIONS ±1/16

▷ = CRITICAL CHARACTERISTIC FLAG PER SPEC. XXXX

ORIG. DRAWN BY: JGK DATE: 12/05/17
CHECKED BY:
APPROVED BY:

conxall
601 E. WILDWOOD VILLA PARK, IL 60181

TITLE: SHIELDED PANEL ASSEMBLY
(2-12) #20 SOLDER CUP, SOCKET CONTACTS
SHIELDED MULTI-CON-X
CUSTOMER: STANDARD PRODUCT

SCALE	SIZE	SHEET
2:1	B	1 OF 1

FILE:	DIRECTORY:	PART NUMBER:	REV
SAME AS P/N	SLW	SF4282-XXSG-3ES	0C