REVISIONS					
REV	ECO	DESCRIPTION	DATE	BY	APPR
A1	–	RELEASE NEW DRAWING	11MAY20	IAN	TOMMY
A2	–	MODIFY PRODUCT NAME	11AUG20	IAN	TOMMY

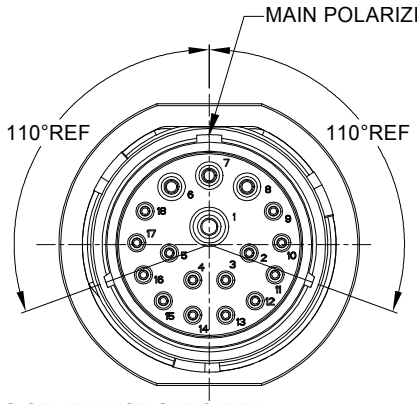

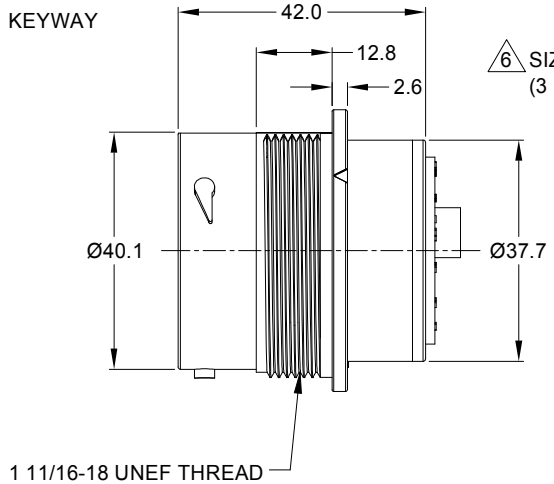

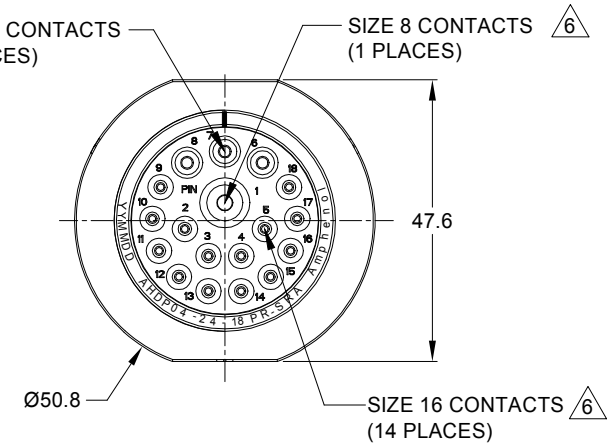

NOTES: UNLESS OTHERWISE SPECIFIED

1. MATERIAL:
   HOUSING: THERMOPLASTIC; BLACK
   SEAL: SILICONE RUBBER

2. MODIFICATIONS: SMOOTH RING ADAPTER (SRA);
   REDUCED DIA. WIRE SEAL.

3. SPECIFICATIONS:
   3.1 OPERATING TEMPERATURE: -55°C TO +125°C.
   3.2 DIELECTRIC WITHSTANDING VOLTAGE: LESS THAN 2 MILLIAMPS CURRENT LEAKAGE @ 1500 VOLTS AC.
   3.3 INSULATION RESISTANCE: 1000 MEGOHM MIN @ 25°C.
   3.4 MOISTURE RESISTANCE: IP67&IP69K (MATED CONDITION).
   3.5 MATING CYCLE DURABILITY: 100 CYCLES
   3.6 RoHS COMPLIANT

4. MATING PART: AHDP06-24-18S* (* = SEAL TYPE)

5. ALL DIMENSIONS ARE FOR REFERENCE USE ONLY.

6 CONTACT SIZE AND WIRE RANGE:

CONTACT SIZE	MIN. INSUL O.D.	MAX. INSUL O.D.	TYPICAL WIRE RANGE	CURRENT RATING
8	3.43 mm (.135in)	5.59 mm (.220 in)	8-10 AWG (10.0-5.0mm²)	60 AMPS
12	2.46 mm (.097in)	4.01 mm (.158 in)	10-14 AWG (6.0-2.0mm²)	25 AMPS
16	1.35 mm (.053 in)	3.05 mm (.120 in)	14-20 AWG (2.0-0.5mm²)	13 AMPS

7. RECEPTACLE IS SUPPLIED WITH DUST CAP.

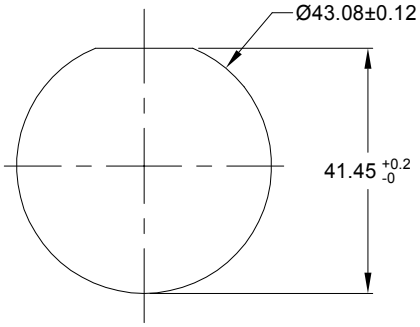

RECOMMENDED PANEL MOUNTING HOLE

RECOMMENDED PANEL THICKNESS:1.6 TO 4.7MM

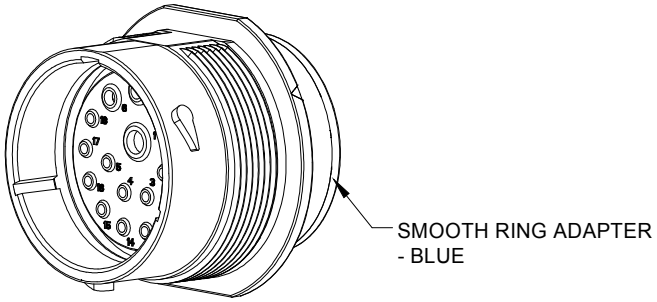

QUANTITY	PART NUMBER	DESCRIPTION	ITEM
	AHDP04-24-18PR-SRA	REF:HDP24-24-18PE	

MATERIALS LIST

UNLESS OTHERWISE SPECIFIED
1) All dimensions are in metric(mm).
2) Tolerances are as follows:
1 PL DEC ±0.30 | Fractions ±1/64
2 PL DEC ±0.15 | Angles ±1°
3 PL DEC ±0.08
3) Note reference = x

MATERIAL SPECIFICATIONS:

PROCESS SPECIFICATIONS:

NEXT ASS'Y:

SIGNATURES		DATE
DRAWN:	IAN.XIAO	11AUG20
CHECKED:	ORION.LI	12AUG20
ENGINEER:		
APPROVAL:	TOMMY.XIE	13AUG20
CUSTOMER:		

THIS DRAWING IS SUPPLIED FOR INFORMATION ONLY. DESIGN FEATURES, SPECIFICATIONS AND PERFORMANCE DATA SHOWN HEREON ARE THE PROPERTY OF THE AMPHENOL CORPORATION. NO RIGHTS OF REPRODUCTION ARE IMPLIED. ALL DIMENSIONS ARE SUBJECT TO NORMAL MANUFACTURING VARIATIONS.

Amphenol
Sine Systems - www.amphenol-sine.com
44724 Morley Drive
Clinton Township, MI 48036

RECEPT.,SIZE 24,18-PIN,
RD01 SEAL,SRA,DURAMATE AHDP SERIES

SIZE	TYPE	DWG NO:	REVISION
B	C-	AHDP04-24-18PR-SRA	A2

SCALE: NONE | DURAMATE | SHEET 1 OF 1

TITLE: RECEPT.,SIZE 24,18-PIN,RD01 SEAL,SRA,DURAMATE AHDP SERIES
DWG NO: AHDP04-24-18PR-SRA
REV: A2
SH: 1
OF: 1