Top View of Assembly

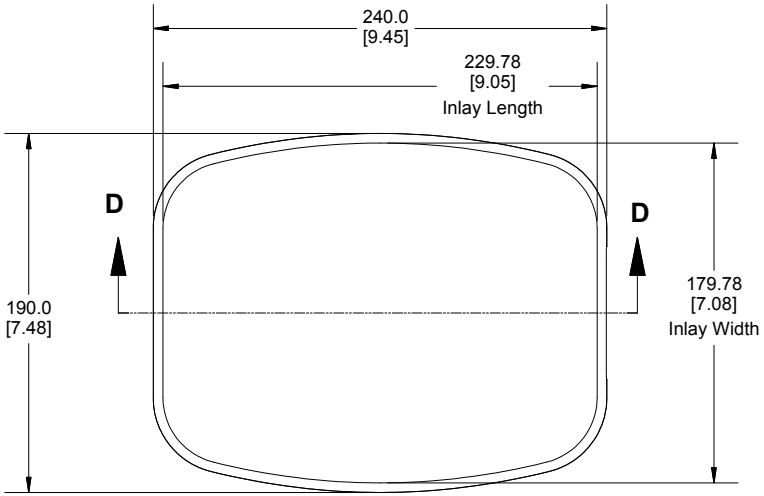

End View of Assembly

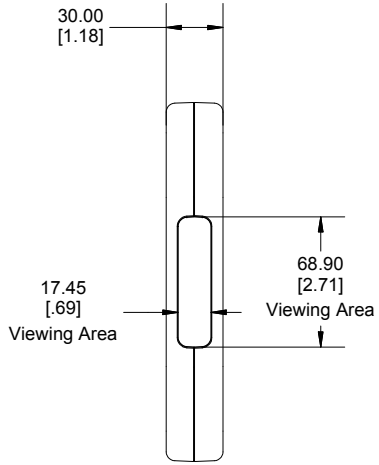

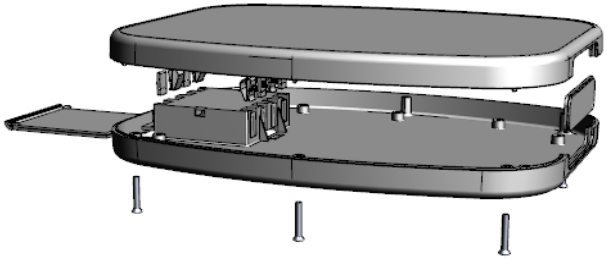

SECTION D-D
(Side View of Assembly)

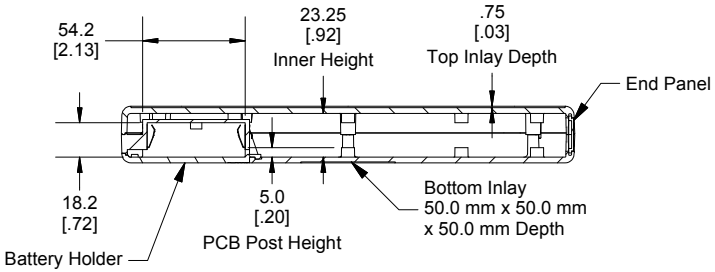

Removable Panel

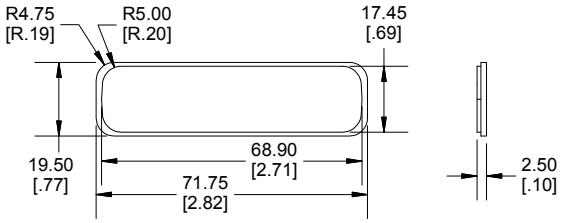

Enclosures can be Factory Modified (Milling, Drilling, Printing etc.)
Contact Factory mjm@hammondmfg.com for quotes
Solid models of this enclosure available in STEP or IGES.
(Part number and text placement/orientation on our products are subject to change, we do not recommend using them as a locating reference for modification purposes)

NOTE
Purchased assembly includes top and bottom cover, 1 removable panel, battery door, battery spring clips (8 pcs), 9V adapter (2 pcs) and 6 cover screws (M3-0.5 x 18mm). M3 Brass inserts are installed for cover screws. Enclosure molded from FR ABS (UL94-V0).
Recommended Cover Screw Torque - 43-50 ozf.in (30-35cN-m)

Inside View Bottom

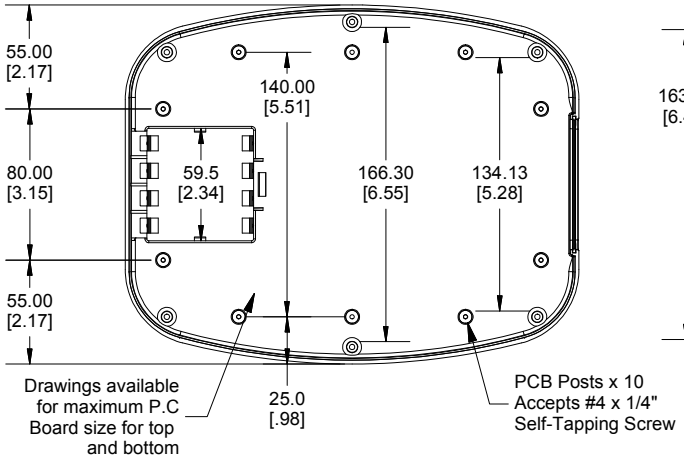

Inside View Top

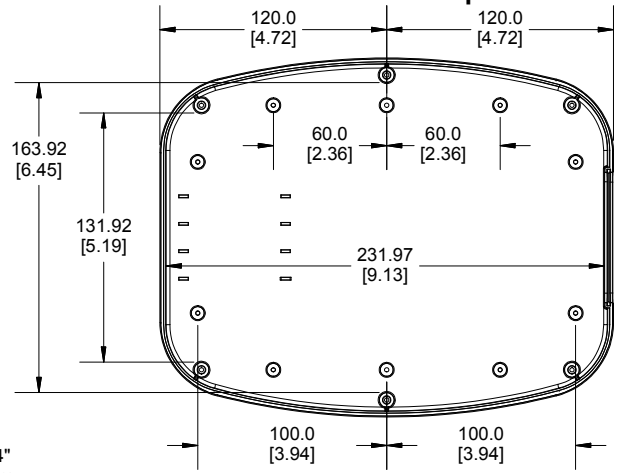

PART NUMBERS	
1599TABLBAT Enclosure	
Black Enclosure	1599TABLBKBAT
Grey Enclosure	1599TABLGYBAT
ACCESSORIES	
Replacement Cover Screws [M3-0.5 x 18mm] (Pkg 100)	1594MS100 (Silver) 1594MS100BK (Black)
P.C. Board Screws (#4 x 1/4" Self Tapping)	1593ATS50 (Pkg 50) 1593ATS100 (Pkg 100)
1599TABL End Panel (Single Panel)	1599TABLPLBK-B (Black) 1599TABLPLGY-B (Grey)
9V Battery Kit	53BATCLIP9V-B
AA Battery Clip Kit (4 positive and 4 Negative)	1553HDR-BKIT

Dimensions:
mm
[inches]

HAMMOND MANUFACTURING®

1599TABLBAT

www.hammondmfg.com