This document is the property of Amphenol Corporation and is delivered on the express condition that it is not to be disclosed, reproduced or used, in whole or in part, for manufacture or sale by anyone other than Amphenol Corporation without its prior concert, & that no right is granted to disclose or to use any information in this document.

REVISIONS				
SYM	ECN	DESCRIPTION	DATE	APPROVED
1			Feb/23/11	

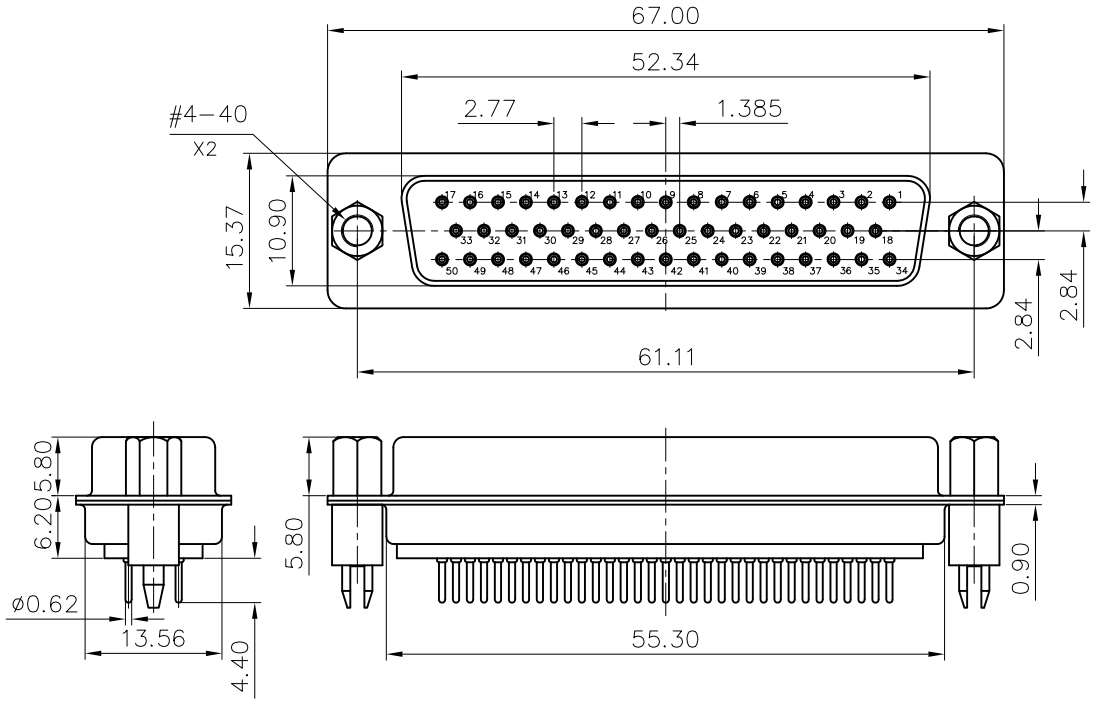

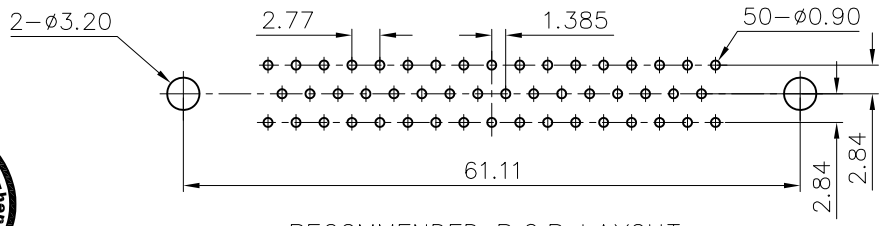

RECOMMENDED P.C.B LAYOUT

(TOLERANCE +/-0.03)

Customer drawing

D-SUB TECHNICAL DATA

SHELL :	Steel, 2.5um (100u") min tin over 1.25um (50u") min nickel
BODY :	Glass filled thermoplastic.
	Flame retardant to UL94 V-0, Color Black
CONTACTS :	Copper alloy
	Gold flash over 50u" min nickel on mating area
	100u" min tin over 50u" min nickel on solder area
SCREWLOCK :	Brass. 50u" min nickel
BOARDLOCK :	Brass. 100u" min tin over 50u" min nickel
ELECTRICAL :	Voltage rating : 250 V RMS at 50 Hz
	Current rating : 3A
	Insulation resistance : 1000 M Ohms
	Contact resistance 20 mOhms max.
CLIMATIC :	Temperature range -55 °C up to 125°C
MARKING :	Amphenol-...(Series No.)
	Commercial reference
	Manufacturing date

PRODUCT CODE

L 77SD D H 50 S OL2 RM8

- L: RoHS Compliance
- 77SD: tinned shell for receptable
- D: Shell Size: D
- H: H=Rear insert 4-40
- 50: Configuration: 50
- S: Contact type: S:Female
- OL2: Termination Straight PCB
- RM8: RM8=retention clip +front screwlodk

UNLESS OTHERWISE SPECIFIED TOLERANCES	U.S.	METRIC
.X +/-		0.50
.XX +/-		0.30
.XXX +/-		0.20
FRACTIONS +/-		
ANGLES +/-		2°

FOR MATERIALS AND FINISHES SEE NOTES

REMOVE SHARP EDGES

DIMENSIONS: U.S. INCHES / METRIC MM

APPROVAL		DATE
DRAWN	Mary.ma	Feb/23/11
CHECKED	Ik.wang	Feb/23/11
CHECKED		

DRAWING FILE :

ANGLE OF PROJECTION

Amphenol

Amphenol East Asia Limited

TITLE: Stamped and Formed connector, SD series

SIZE	DRAWING NO.	REV.
A4	C L77SDDH50SOL2RM8	1

SCALE NONE SHEET 1 OF 1