THIS DRAWING IS UNPUBLISHED. RELEASED FOR PUBLICATION 20
© COPYRIGHT 20 TE CONNECTIVITY ALL RIGHTS RESERVED.

LOC	DIST
-	-

REVISIONS

P	LTR	DESCRIPTION	DATE	DWN	APVD
	B	REVISED	23NOV2020	SS	DZ
	B1	REVISED	25NOV2020	DZ	SS
	B2	ADD TYPE VI PACKAGE	25DEC2020	SS	DZ

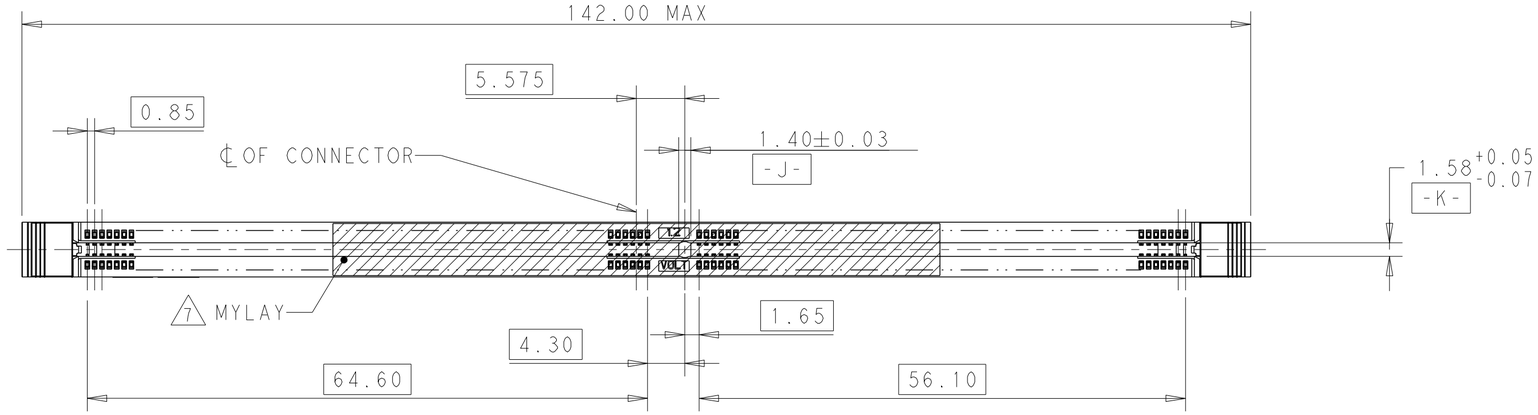

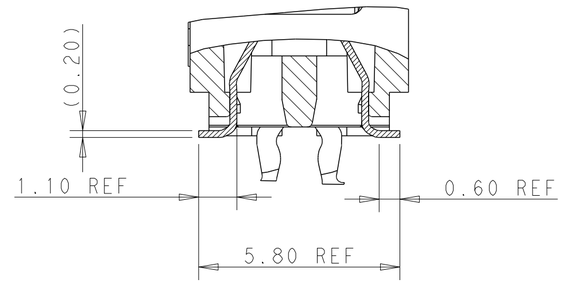

DETAIL D
SCALE 8:1

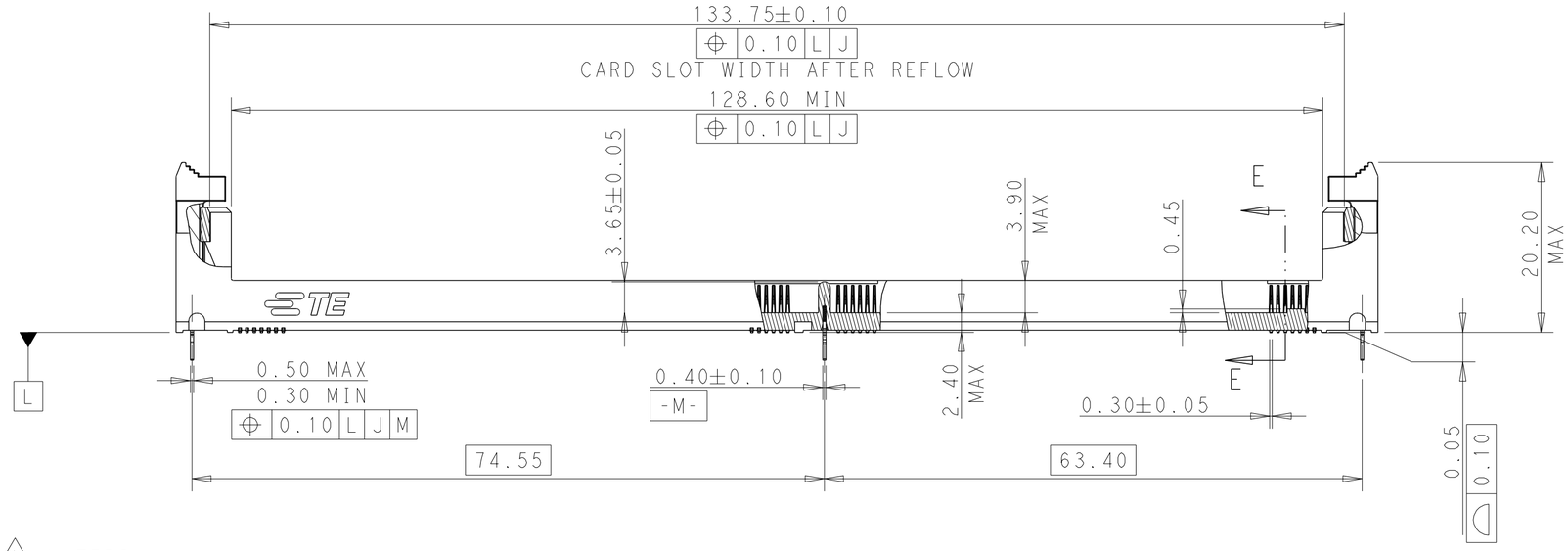

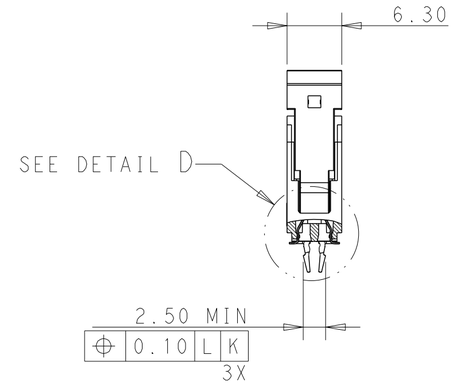

SECTION E-E

1 MATERIAL:
HOUSING: HIGH TEMPERATURE NYLON,UL94 V-0
LATCH: HIGH TEMPERATURE NYLON,UL94 V-0
CONTACT: COPPER ALLOY
RETENTION BARB: STAINLESS STEEL

2 INTERFACE FINISH:
(1) 0.00076 MIN THICK GOLD OVER 0.00127 MIN THICK NICKEL.
(2) 0.00038 MIN THICK GOLD OVER 0.00127 MIN THICK NICKEL.
(3) 0.00050 MIN THICK GOLD OVER 0.00228 MIN THICK NICKEL.
(4) 0.00045 MIN THICK GOLD OVER 0.00127 MIN THICK NICKEL.

3 SOLDERTAIL FINISH:
0.00300 MIN THICK MATTE TIN OVER 0.00127 MIN THICK NICKEL.

4 KEEP OUT ZONE.

5 KEEP OUT AREA RESERVED FOR SOCKET LATCHES, BOTH ENDS.

6 DATUM Z IS CONNECTOR SIDE SURFACE OF PCB.

7 MYLAR WITH SIZE 70X6 IS LOCATED IN THE CENTER OF CONNECTOR.

8 SLOT LENGTH IS INSPECTED AFTER REFLOW.

THIS DRAWING IS A CONTROLLED DOCUMENT.

DIMENSIONS: mm

TOLERANCES UNLESS OTHERWISE SPECIFIED:
0 PLC ±-
1 PLC ±0.25
2 PLC ±0.15
3 PLC ±0.10
4 PLC ±-
ANGLES ±-

MATERIAL -
FINISH -

DWN RICHARD MA 17JAN2014
CHK SIMON LI 17JAN2014
APVD COREL WANG 17JAN2014
PRODUCT SPEC 108-115068
APPLICATION SPEC -
WEIGHT -

TE Connectivity

NAME
SOCKET ASSEMBLY
DDR4 DIMM,SMT TYPE GENERAL
288 POSITION

SIZE	CAGE CODE	DRAWING NO	RESTRICTED TO
A2	00779	C-2199155	

RESTRICTED CUSTOMER

SCALE 2:1 SHEET 1 OF 14 REV B2

printed on 4 Jan 2021 12:09 from FG086959

THIS DRAWING IS UNPUBLISHED. RELEASED FOR PUBLICATION 20
© COPYRIGHT 20 TE CONNECTIVITY ALL RIGHTS RESERVED.

LOC	DIST
-	-

REVISIONS

P	LTR	DESCRIPTION	DATE	DWN	APVD

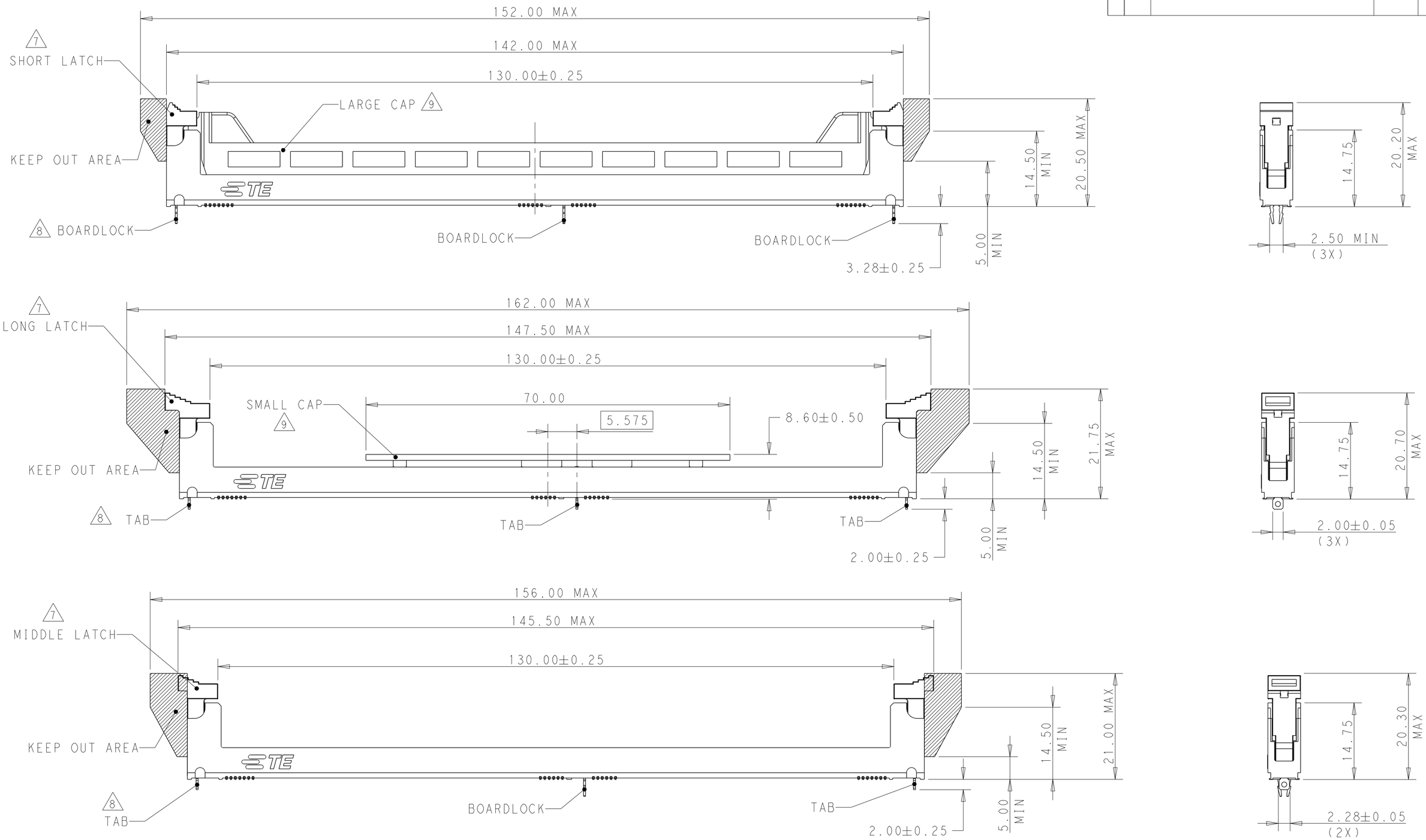

7 SHORT,LONG AND MIDDLE LATCH ARE OPTIONAL FOR DIFFERENT KEEPOUT APPLICATION.

8 BOARDLOCK AND TAB ARE OPTIONAL FOR DIFFERENT APPLICATION.

9 MYLAR AND LARGE CAP&SMALL CAP ARE OPTIONAL FOR DIFFERENT APPLICATION.

THIS DRAWING IS A CONTROLLED DOCUMENT.

DIMENSIONS: mm

TOLERANCES UNLESS OTHERWISE SPECIFIED:

0 PLC	±-
1 PLC	±0.25
2 PLC	±0.15
3 PLC	±0.10
4 PLC	±-
ANGLES	±-

MATERIAL -

FINISH -

DWN	RICHARD MA	17JAN2014
CHK	SIMON LI	17JAN2014
APVD	COREL WANG	17JAN2014

PRODUCT SPEC 108-115068

APPLICATION SPEC -

WEIGHT -

TE Connectivity

NAME SOCKET ASSEMBLY DDR4 DIMM,SMT TYPE GENERAL 288 POSITION

SIZE	CAGE CODE	DRAWING NO	RESTRICTED TO
A2	00779	C-2199155	

RESTRICTED CUSTOMER

SCALE 3:1 SHEET 2 OF 14 REV B2

printed on 4 Jan 202 12:09 from FG086959

THIS DRAWING IS UNPUBLISHED. RELEASED FOR PUBLICATION 20
© COPYRIGHT 20 TE CONNECTIVITY ALL RIGHTS RESERVED.

LOC	DIST
-	-

REVISIONS

P	LTR	DESCRIPTION	DATE	DWN	APVD

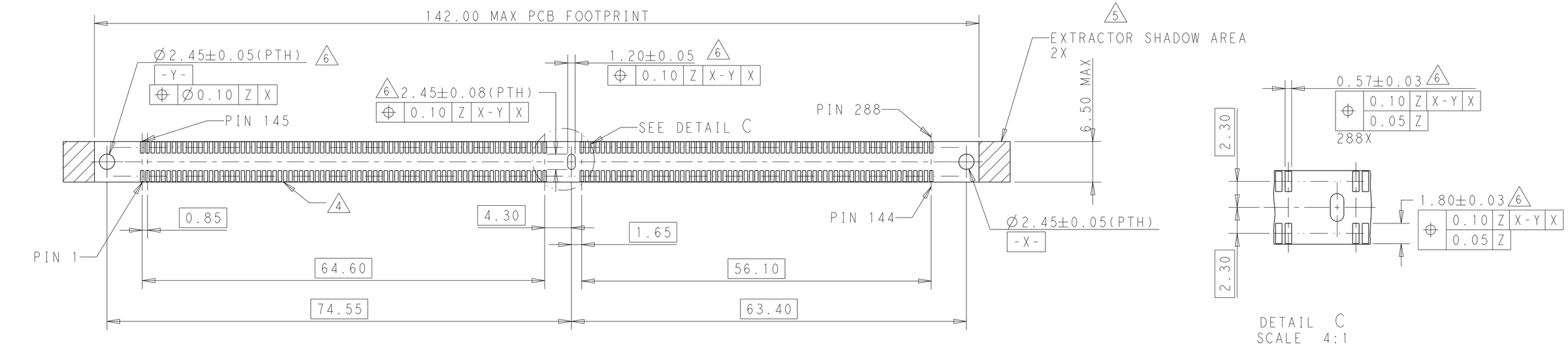

RECOMMENDED PCB LAYOUT FOR 3 BOARDLOCKS
VIEWED FROM CONNECTOR SIDE

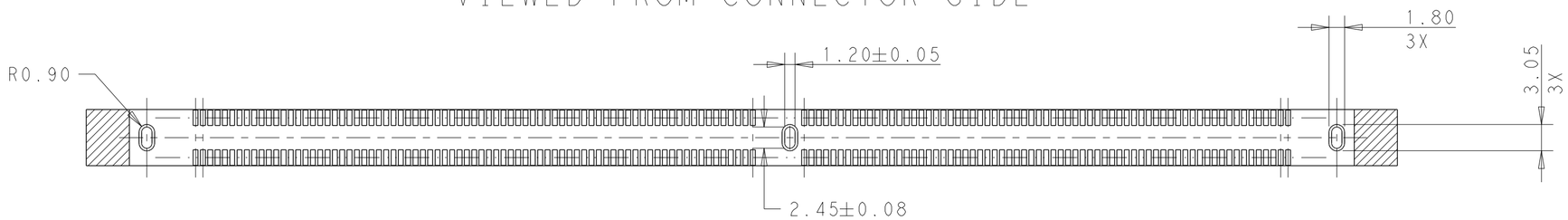

RECOMMENDED PCB LAYOUT FOR 3 TABS

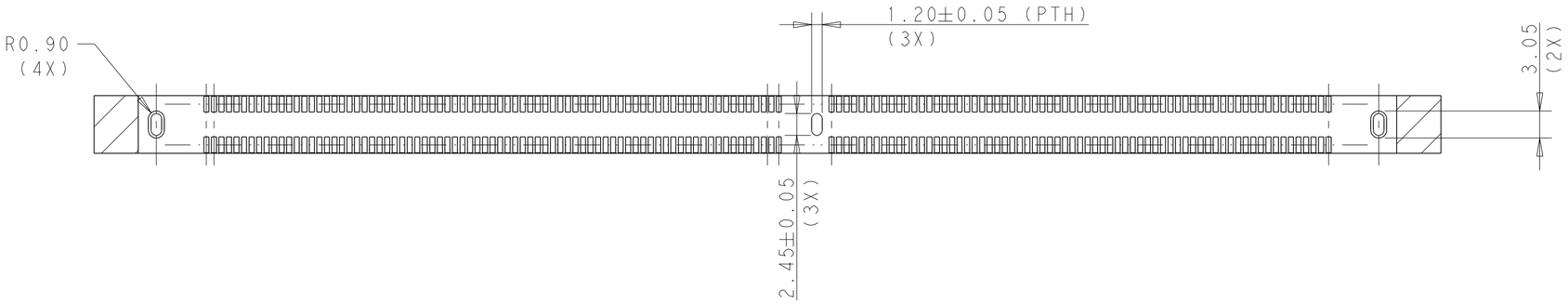

RECOMMENDED PCB LAYOUT FOR 2 SIDE TABS

1. DATUM Z IS THE TOP SIZE OF PCB.
2. HOLD DOWN HOLE SHOULD BE PLATED THROUGH HOLE.

THIS DRAWING IS A CONTROLLED DOCUMENT.

DIMENSIONS: mm

TOLERANCES UNLESS OTHERWISE SPECIFIED:
0 PLC ±-
1 PLC ±0.25
2 PLC ±0.15
3 PLC ±0.10
4 PLC ±-
ANGLES ±-

MATERIAL -
FINISH -

DWN RICHARD MA 17JAN2014
CHK SIMON LI 17JAN2014
APVD COREL WANG 17JAN2014
PRODUCT SPEC 108-115068
APPLICATION SPEC -
WEIGHT -

TE Connectivity

NAME SOCKET ASSEMBLY
DDR4 DIMM,SMT TYPE GENERAL
288 POSITION

SIZE	CAGE CODE	DRAWING NO	RESTRICTED TO
A2	00779	C-2199155	

RESTRICTED CUSTOMER

SCALE 1:1 SHEET 3 OF 14 REV B2

printed on 4 Jan 2021 12:09 from FG086959

THIS DRAWING IS UNPUBLISHED. RELEASED FOR PUBLICATION 20
© COPYRIGHT 20 TE CONNECTIVITY ALL RIGHTS RESERVED.

LOC	DIST
-	-

REVISIONS

P	LTR	DESCRIPTION	DATE	DWN	APVD

SHORT LATCH TYPE

TYPE V	NO MYLAR	SHORT LATCH	3 TAB	NATURAL	BLACK	0.00038 MIN	2368060-4
TYPE V	NO MYLAR	SHORT LATCH	3 TAB	BLACK	BLACK	0.00038 MIN	2368060-3
TYPE I	MYLAR	SHORT LATCH	3 TAB	NATURAL	YELLOW(107C)	0.00038 MIN	9-2199155-3
TYPE I	MYLAR	SHORT LATCH	3 TAB	NATURAL	BLACK	0.00076 MIN	9-2199155-2
TYPE I	MYLAR	SHORT LATCH	3 TAB	NATURAL	BLACK	0.00038 MIN	9-2199155-1
TYPE I	MYLAR	SHORT LATCH	3 BOARDLOCK	GREEN(375C)	BLACK	0.00050 MIN	8-2199155-1
TYPE I	MYLAR	SHORT LATCH	3 BOARDLOCK	BLUE(2935U)	BLUE(2935U)	0.00076 MIN	6-2199155-9
TYPE I	NO MYLAR	SHORT LATCH	3 BOARDLOCK	NATURAL	BLACK	0.00076 MIN	6-2199155-8
TYPE I	NO MYLAR	SHORT LATCH	3 BOARDLOCK	BLACK	BLACK	0.00076 MIN	6-2199155-4
TYPE I	MYLAR	SHORT LATCH	3 BOARDLOCK	BLACK	BLACK	0.00050 MIN	5-2199155-2
TYPE I	MYLAR	SHORT LATCH	3 BOARDLOCK	NATURAL	BLACK	0.00050 MIN	5-2199155-1
TYPE I	MYLAR	SHORT LATCH	3 BOARDLOCK	NATURAL	BLUE(2935U)	0.00038 MIN	5-2199155-0
TYPE I	MYLAR	SHORT LATCH	3 BOARDLOCK	BLACK	NATURAL	0.00076 MIN	4-2199155-8
TYPE I	NO MYLAR	SHORT LATCH	3 BOARDLOCK	NATURAL	NATURAL	0.00076 MIN	4-2199155-7
TYPE I	MYLAR	SHORT LATCH	3 TAB	NATURAL	NATURAL	0.00076 MIN	4-2199155-6
TYPE I	MYLAR	SHORT LATCH	3 TAB	BLACK	BLACK	0.00076 MIN	4-2199155-5
TYPE III	NO MYLAR	SHORT LATCH	3 TAB	NATURAL	BLACK	0.00038 MIN	3-2199155-4
TYPE III	NO MYLAR	SHORT LATCH	3 TAB	BLACK	BLACK	0.00038 MIN	3-2199155-3
TYPE I	MYLAR	SHORT LATCH	3 TAB	BLACK	BLACK	0.00038 MIN	3-2199155-2
TYPE I	MYLAR	SHORT LATCH	3 BOARDLOCK	NATURAL	BLUE(2935U)	0.00076 MIN	1-2199155-3
TYPE I	MYLAR	SHORT LATCH	3 BOARDLOCK	GREEN(375C)	BLACK	0.00076 MIN	2199155-7
TYPE I	MYLAR	SHORT LATCH	3 BOARDLOCK	NATURAL	NATURAL	0.00076 MIN	2199155-6
TYPE I	MYLAR	SHORT LATCH	3 TAB	NATURAL	BLUE(2935U)	0.00076 MIN	2199155-5
TYPE I	MYLAR	SHORT LATCH	3 BOARDLOCK	BLACK	BLACK	0.00076 MIN	2199155-4
TYPE I	MYLAR	SHORT LATCH	3 BOARDLOCK	BLACK	BLACK	0.00038 MIN	2199155-3
TYPE I	MYLAR	SHORT LATCH	3 BOARDLOCK	NATURAL	BLACK	0.00076 MIN	2199155-2
TYPE I	MYLAR	SHORT LATCH	3 BOARDLOCK	NATURAL	BLACK	0.00038 MIN	2199155-1
PACKAGE TYPE	PICK-UP TYPE	LATCH TYPE	HOUSING HOLD DOWN	LATCH COLOR	HOUSING COLOR	CONTACT GOLD INTERFACE	PART NUMBER

THIS DRAWING IS A CONTROLLED DOCUMENT.

DIMENSIONS: mm

TOLERANCES UNLESS OTHERWISE SPECIFIED:
0 PLC ±-
1 PLC ±0.25
2 PLC ±0.15
3 PLC ±0.10
4 PLC ±-
ANGLES ±-
FINISH -

MATERIAL -

DWN RICHARD MA 17JAN2014
CHK SIMON LI 17JAN2014
APVD COREL WANG 17JAN2014
PRODUCT SPEC 108-115068
APPLICATION SPEC -
WEIGHT -

TE Connectivity

NAME SOCKET ASSEMBLY
DDR4 DIMM,SMT TYPE GENERAL
288 POSITION

SIZE	CAGE CODE	DRAWING NO	RESTRICTED TO
A2	00779	C-2199155	

RESTRICTED CUSTOMER

SCALE 1:1 SHEET 4 OF 14 REV B2

printed on 4 Jan 2021 12:09 from FG086959

THIS DRAWING IS UNPUBLISHED. RELEASED FOR PUBLICATION 20
© COPYRIGHT 20 TE CONNECTIVITY ALL RIGHTS RESERVED.

LOC	DIST
-	-

REVISIONS

P	LTR	DESCRIPTION	DATE	DWN	APVD

LONG LATCH TYPE

	TYPE VI	NO MYLAR	LONG LATCH	3 BOARDLOCK	NATURAL	BLUE(2935U)	0.00076 MIN	1-2368060-9
	TYPE VI	NO MYLAR	LONG LATCH	3 BOARDLOCK	NATURAL	BLACK	0.00076 MIN	1-2368060-8
	TYPE I	MYLAR	LONG LATCH	3 TAB	BLACK	BLACK	0.00076 MIN	9-2199155-9
	TYPE I	MYLAR	LONG LATCH	3 TAB	NATURAL	BLACK	0.00076 MIN	9-2199155-6
OBSOLETE	~~TYPE I~~	~~MYLAR~~	~~LONG LATCH~~	~~3 TAB~~	~~NATURAL~~	~~YELLOW(107C)~~	~~0.00038 MIN~~	~~9-2199155-5~~
	TYPE I	MYLAR	LONG LATCH	3 TAB	NATURAL	BLACK	0.00038 MIN	9-2199155-4
	TYPE I	MYLAR	LONG LATCH	3 BOARDLOCK	BLACK	BLACK	0.00038 MIN	9-2199155-0
	TYPE I	NO MYLAR	LONG LATCH	3 TAB	NATURAL	BLUE(2935U)	0.00038 MIN	8-2199155-9
	TYPE I	NO MYLAR	LONG LATCH	3 TAB	NATURAL	BLACK	0.00038 MIN	8-2199155-8
	TYPE I	MYLAR	LONG LATCH	3 TAB	NATURAL	BLUE(2935U)	0.00076 MIN	8-2199155-5
	TYPE I	MYLAR	LONG LATCH	3 BOARDLOCK	NATURAL	NATURAL	0.00038 MIN	8-2199155-4
	TYPE I	MYLAR	LONG LATCH	3 BOARDLOCK	BLUE(2935U)	BLUE(2935U)	0.00038 MIN	8-2199155-3
	TYPE I	MYLAR	LONG LATCH	3 TAB	BLUE(2935U)	BLUE(2935U)	0.00076 MIN	8-2199155-2
	TYPE I	NO MYLAR	LONG LATCH	3 BOARDLOCK	BLACK	BLACK	0.00076 MIN	7-2199155-8
	TYPE II	MYLAR	LONG LATCH	2TAB+1BOARDLOCK	NATURAL	NATURAL	0.00038 MIN	7-2199155-7
	TYPE II	MYLAR	LONG LATCH	2TAB+1BOARDLOCK	BLACK	BLACK	0.00038 MIN	7-2199155-6
	TYPE I	NO MYLAR	LONG LATCH	3 BOARDLOCK	BLUE(2935U)	BLUE(2935U)	0.00076 MIN	7-2199155-5
	TYPE I	NO MYLAR	LONG LATCH	3 BOARDLOCK	BLUE(2935U)	BLUE(2935U)	0.00038 MIN	7-2199155-4
	TYPE I	NO MYLAR	LONG LATCH	3 BOARDLOCK	BLACK	BLACK	0.00038 MIN	7-2199155-3
	TYPE I	MYLAR	LONG LATCH	3 BOARDLOCK	BLACK	BLACK	0.00076 MIN	7-2199155-2
	TYPE I	MYLAR	LONG LATCH	3 BOARDLOCK	NATURAL	BLUE(2935U)	0.00045 MIN	7-2199155-1
	TYPE I	MYLAR	LONG LATCH	3 BOARDLOCK	NATURAL	BLACK	0.00045 MIN	7-2199155-0
	TYPE I	MYLAR	LONG LATCH	3 TAB	GREEN(375C)	YELLOW(107C)	0.00038 MIN	6-2199155-7
	TYPE I	MYLAR	LONG LATCH	3 TAB	GREEN(375C)	BLACK	0.00038 MIN	6-2199155-6
	TYPE I	MYLAR	LONG LATCH	3 TAB	NATURAL	YELLOW(107C)	0.00038 MIN	6-2199155-5
	TYPE I	NO MYLAR	LONG LATCH	3 BOARDLOCK	NATURAL	YELLOW(107C)	0.00038 MIN	6-2199155-3
	TYPE I	MYLAR	LONG LATCH	3 BOARDLOCK	BLUE(2935U)	BLUE(2935U)	0.00076 MIN	4-2199155-9
	TYPE I	NO MYLAR	LONG LATCH	3 TAB	NATURAL	YELLOW(107C)	0.00038 MIN	2-2199155-4
	TYPE I	MYLAR	LONG LATCH	3 BOARDLOCK	NATURAL	NATURAL	0.00076 MIN	2-2199155-3
	TYPE I	MYLAR	LONG LATCH	3 TAB	NATURAL	NATURAL	0.00076 MIN	2-2199155-2
	TYPE VI	NO MYLAR	LONG LATCH	3 BOARDLOCK	NATURAL	BLUE(2935U)	0.00076 MIN	1-2199155-9
	TYPE VI	NO MYLAR	LONG LATCH	3 BOARDLOCK	NATURAL	BLACK	0.00076 MIN	1-2199155-8
	TYPE I	MYLAR	LONG LATCH	3 TAB	BLACK	BLACK	0.00038 MIN	1-2199155-6
	TYPE I	MYLAR	LONG LATCH	3 TAB	NATURAL	BLUE(2935U)	0.00038 MIN	1-2199155-5
	PACKAGE TYPE	PICK-UP TYPE	LATCH TYPE	HOUSING HOLD DOWN	LATCH COLOR	HOUSING COLOR	CONTACT GOLD INTERFACE	PART NUMBER

THIS DRAWING IS A CONTROLLED DOCUMENT.

DIMENSIONS: mm

TOLERANCES UNLESS OTHERWISE SPECIFIED:
0 PLC ±-
1 PLC ±0.25
2 PLC ±0.15
3 PLC ±0.10
4 PLC ±-
ANGLES ±-

MATERIAL -
FINISH -

DWN RICHARD MA 17JAN2014
CHK SIMON LI 17JAN2014
APVD COREL WANG 17JAN2014
PRODUCT SPEC 108-115068
APPLICATION SPEC -
WEIGHT -

TE Connectivity

NAME SOCKET ASSEMBLY
DDR4 DIMM,SMT TYPE GENERAL
288 POSITION

SIZE A2 | CAGE CODE 00779 | DRAWING NO C-2199155 | RESTRICTED TO

RESTRICTED CUSTOMER | SCALE 1:1 | SHEET 5 OF 14 | REV B2

printed on 4 Jan 202 12:09 from FG086959

THIS DRAWING IS UNPUBLISHED. RELEASED FOR PUBLICATION 20
© COPYRIGHT 20 TE CONNECTIVITY ALL RIGHTS RESERVED.

LOC	DIST
-	-

REVISIONS

P	LTR	DESCRIPTION	DATE	DWN	APVD

MIDDLE LATCH TYPE

PACKAGE TYPE	PICK-UP TYPE	LATCH TYPE	HOUSING HOLD DOWN	LATCH COLOR	HOUSING COLOR	CONTACT GOLD INTERFACE	PART NUMBER
TYPE I	MYLAR	MIDDLE LATCH	3 TAB	NATURAL	BLACK	0.00076 MIN	2368060-6
TYPE I	MYLAR	MIDDLE LATCH	3 TAB	BLACK	BLACK	0.00076 MIN	2368060-5
TYPE I	MYLAR	MIDDLE LATCH	3 BOARDLOCK	NATURAL	YELLOW(107C)	0.00038 MIN	2368060-2
TYPE I	MYLAR	MIDDLE LATCH	3 BOARDLOCK	NATURAL	BLACK	0.00038 MIN	2368060-1
TYPE I	MYLAR	MIDDLE LATCH	3 TAB	NATURAL	NATURAL	0.00076 MIN	6-2199155-2
TYPE I	MYLAR	MIDDLE LATCH	3 TAB	BLACK	BLACK	0.00076 MIN	6-2199155-1
TYPE I	MYLAR	MIDDLE LATCH	2TAB+1BOARDLOCK	NATURAL	BLACK	0.00038 MIN	6-2199155-0
TYPE I	MYLAR	MIDDLE LATCH	2TAB+1BOARDLOCK	NATURAL	BLUE(2935U)	0.00038 MIN	5-2199155-9
TYPE I	NO MYLAR	MIDDLE LATCH	3 BOARDLOCK	NATURAL	BLACK	0.00038 MIN	5-2199155-8
TYPE I	NO MYLAR	MIDDLE LATCH	3 BOARDLOCK	NATURAL	YELLOW(107C)	0.00038 MIN	5-2199155-7
TYPE I	NO MYLAR	MIDDLE LATCH	3 BOARDLOCK	NATURAL	BLACK	0.00076 MIN	5-2199155-6
TYPE I	NO MYLAR	MIDDLE LATCH	3 BOARDLOCK	NATURAL	YELLOW(107C)	0.00076 MIN	5-2199155-5
TYPE I	MYLAR	MIDDLE LATCH	3 BOARDLOCK	BLACK	BLACK	0.00076 MIN	5-2199155-4
TYPE I	MYLAR	MIDDLE LATCH	3 BOARDLOCK	NATURAL	BLACK	0.00076 MIN	5-2199155-3
TYPE I	LARGE CAP	MIDDLE LATCH	3 TAB	NATURAL	BLACK	0.00038 MIN	3-2199155-7
TYPE I	LARGE CAP	MIDDLE LATCH	3 TAB	BLACK	BLACK	0.00038 MIN	3-2199155-6
TYPE I	NO MYLAR	MIDDLE LATCH	3 TAB	BLACK	BLACK	0.00076 MIN	2-2199155-6
TYPE I	NO MYLAR	MIDDLE LATCH	3 TAB	NATURAL	NATURAL	0.00076 MIN	2-2199155-5
TYPE IV	SMALL CAP	MIDDLE LATCH	3 TAB	NATURAL	BLACK	0.00038 MIN	2-2199155-1
TYPE IV	SMALL CAP	MIDDLE LATCH	3 TAB	BLACK	BLACK	0.00038 MIN	2-2199155-0
TYPE I	MYLAR	MIDDLE LATCH	3 TAB	NATURAL	BLACK	0.00076 MIN	1-2199155-7
TYPE I	NO MYLAR	MIDDLE LATCH	3 BOARDLOCK	NATURAL	BLUE(2935U)	0.00045 MIN	1-2199155-4
TYPE I	NO MYLAR	MIDDLE LATCH	3 TAB	BLACK	BLUE(2935U)	0.00076 MIN	1-2199155-0

THIS DRAWING IS A CONTROLLED DOCUMENT.

DIMENSIONS: mm

TOLERANCES UNLESS OTHERWISE SPECIFIED:

0 PLC	±-
1 PLC	±0.25
2 PLC	±0.15
3 PLC	±0.10
4 PLC	±-
ANGLES	±-

MATERIAL -

FINISH -

DWN RICHARD MA 17JAN2014
CHK SIMON LI 17JAN2014
APVD COREL WANG 17JAN2014
PRODUCT SPEC 108-115068
APPLICATION SPEC -
WEIGHT -

TE Connectivity

NAME SOCKET ASSEMBLY
DDR4 DIMM,SMT TYPE GENERAL
288 POSITION

SIZE	CAGE CODE	DRAWING NO	RESTRICTED TO
A2	00779	C-2199155	

RESTRICTED CUSTOMER

SCALE 1:1 SHEET 6 OF 14 REV B2

printed on 4 Jan 202 12:09 from FG086959

THIS DRAWING IS UNPUBLISHED. RELEASED FOR PUBLICATION 20
© COPYRIGHT 20 TE CONNECTIVITY ALL RIGHTS RESERVED.

LOC	DIST
-	-

REVISIONS

P	LTR	DESCRIPTION	DATE	DWN	APVD

FIXED LATCH TYPE

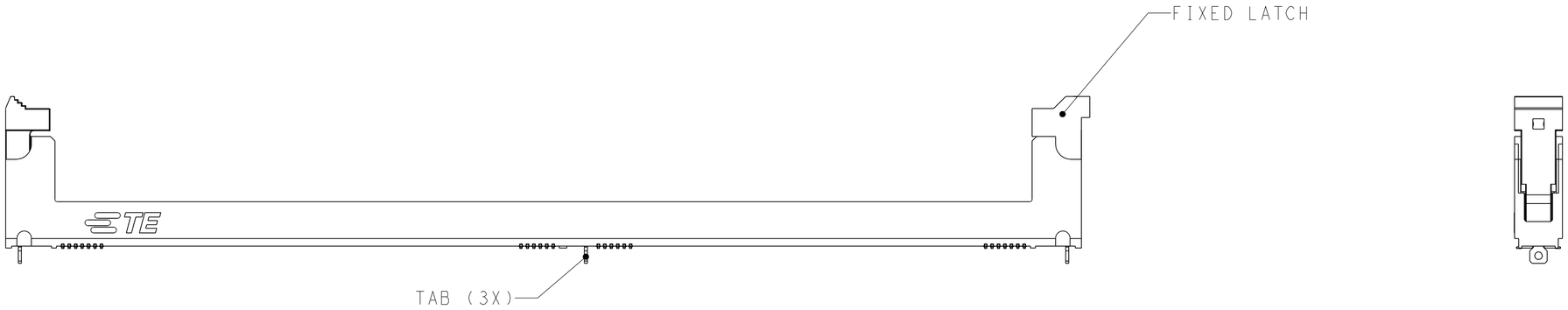

TYPE I	MYLAR	SHORT	FIXED	3 TAB	NATURAL	BLUE(2935U)	0.00038 MIN	3-2199155-0
PACKAGE TYPE	PICK-UP TYPE	LEFT LATCH	RIGHT LATCH	HOUSING HOLD DOWN	LATCH COLOR	HOUSING COLOR	CONTACT GOLD INTERFACE	PART NUMBER

THIS DRAWING IS A CONTROLLED DOCUMENT.

DIMENSIONS: mm

TOLERANCES UNLESS OTHERWISE SPECIFIED:
0 PLC ±-
1 PLC ±0.25
2 PLC ±0.15
3 PLC ±0.10
4 PLC ±-
ANGLES ±-

MATERIAL -
FINISH -

DWN RICHARD MA 17JAN2014
CHK SIMON LI 17JAN2014
APVD COREL WANG 17JAN2014
PRODUCT SPEC 108-115068
APPLICATION SPEC -
WEIGHT -

TE Connectivity

NAME SOCKET ASSEMBLY
DDR4 DIMM,SMT TYPE GENERAL
288 POSITION

SIZE	CAGE CODE	DRAWING NO	RESTRICTED TO
A2	00779	C-2199155	

RESTRICTED CUSTOMER | SCALE 1:1 | SHEET 7 OF 14 | REV B2

printed on 4 Jan 202 12:09 from FG086959

THIS DRAWING IS UNPUBLISHED. RELEASED FOR PUBLICATION 20
© COPYRIGHT 20 TE CONNECTIVITY ALL RIGHTS RESERVED.

LOC	DIST
-	-

REVISIONS

P	LTR	DESCRIPTION	DATE	DWN	APVD

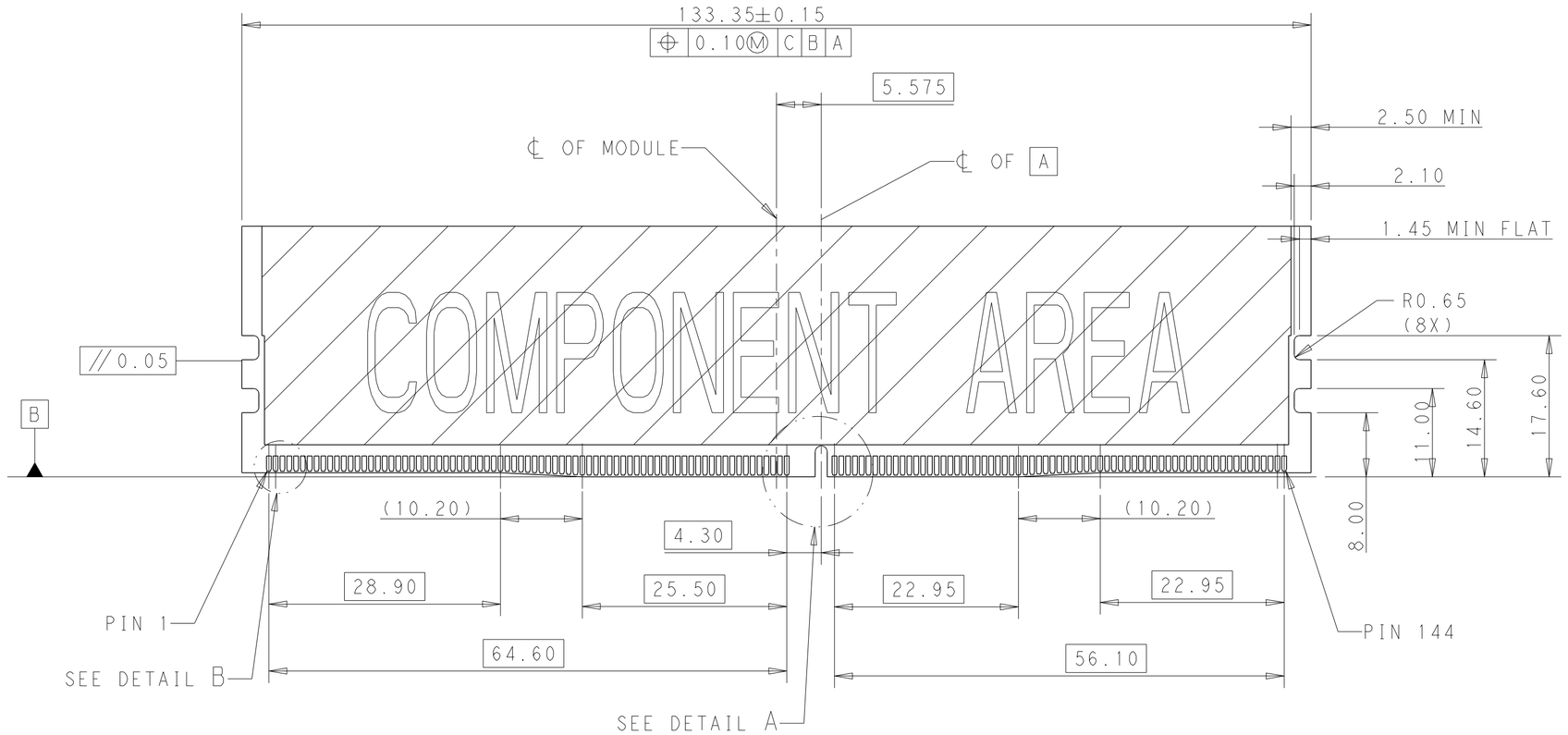

RECOMMENDED MODULE LAYOUT

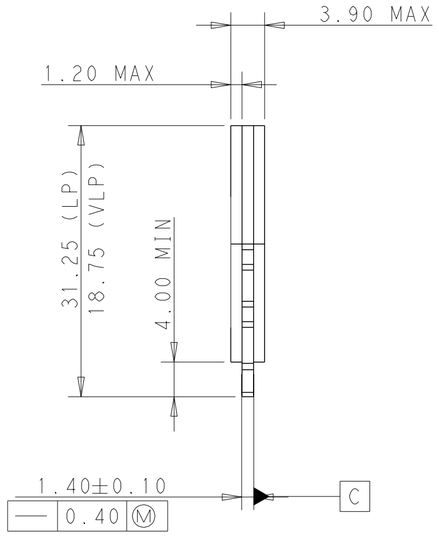

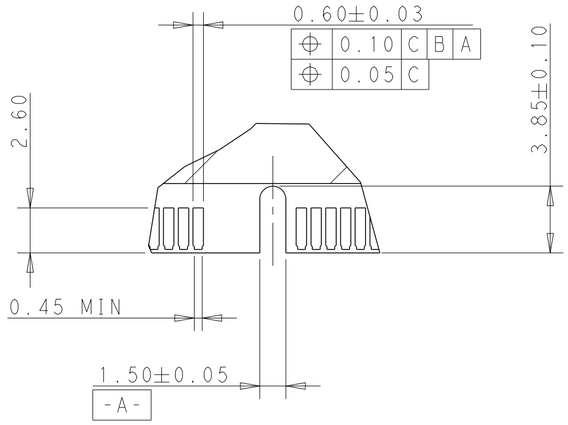

DETAIL A
SCALE 4:1

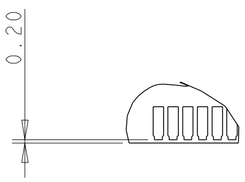

DETAIL B
SCALE 4:1

THIS DRAWING IS A CONTROLLED DOCUMENT.

DIMENSIONS: mm

TOLERANCES UNLESS OTHERWISE SPECIFIED:
0 PLC ±-
1 PLC ±0.25
2 PLC ±0.15
3 PLC ±0.10
4 PLC ±-
ANGLES ±-

MATERIAL -
FINISH -

DWN RICHARD MA 17JAN2014
CHK SIMON LI 17JAN2014
APVD COREL WANG 17JAN2014
PRODUCT SPEC 108-115068
APPLICATION SPEC -
WEIGHT -

TE Connectivity

NAME SOCKET ASSEMBLY
DDR4 DIMM,SMT TYPE GENERAL
288 POSITION

SIZE	CAGE CODE	DRAWING NO	RESTRICTED TO
A2	00779	C-2199155	

RESTRICTED CUSTOMER

SCALE	SHEET	OF	REV
1:1	8	14	B2

printed on 4 Jan 202 12:09 from FG086959

THIS DRAWING IS UNPUBLISHED. RELEASED FOR PUBLICATION 20
© COPYRIGHT 20 TE CONNECTIVITY ALL RIGHTS RESERVED.

LOC	DIST
-	-

REVISIONS

P	LTR	DESCRIPTION	DATE	DWN	APVD

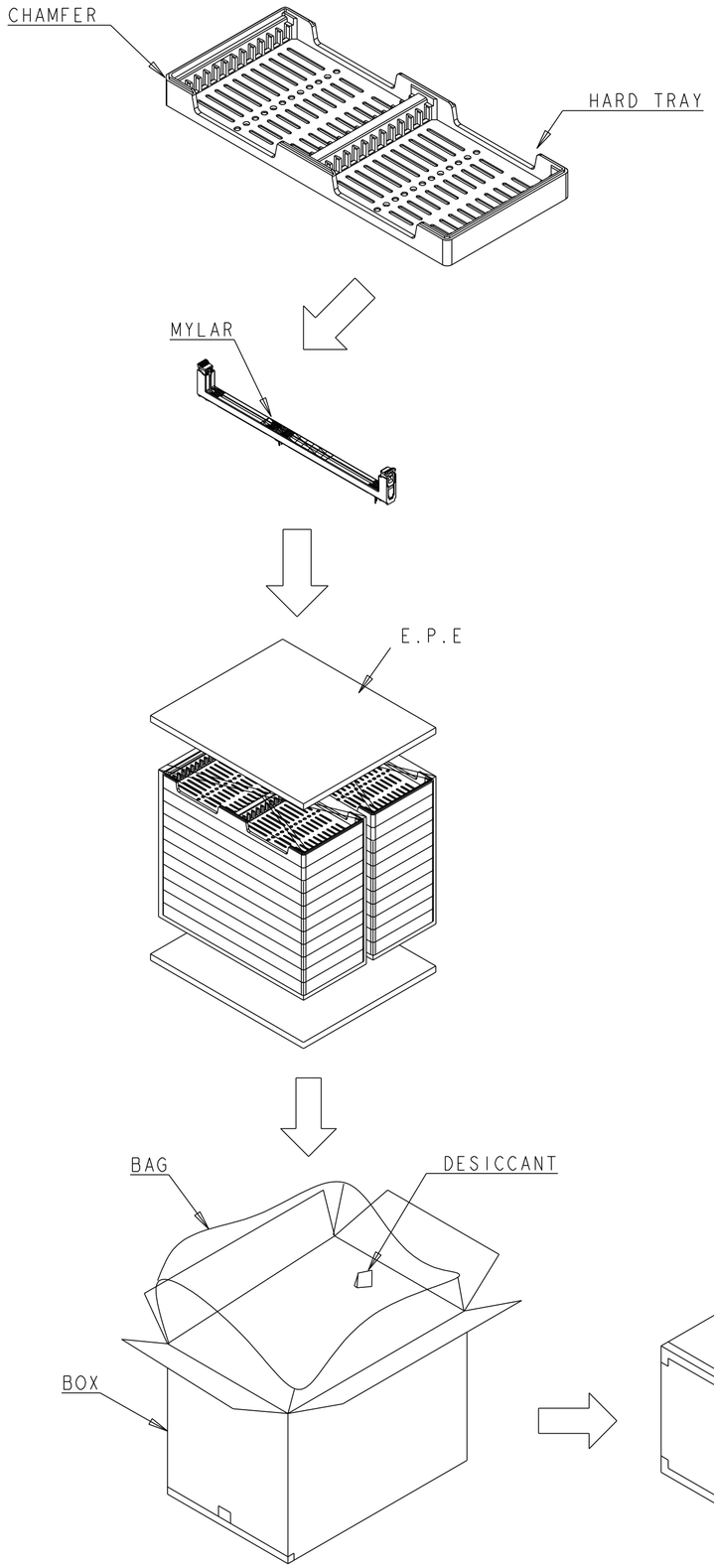

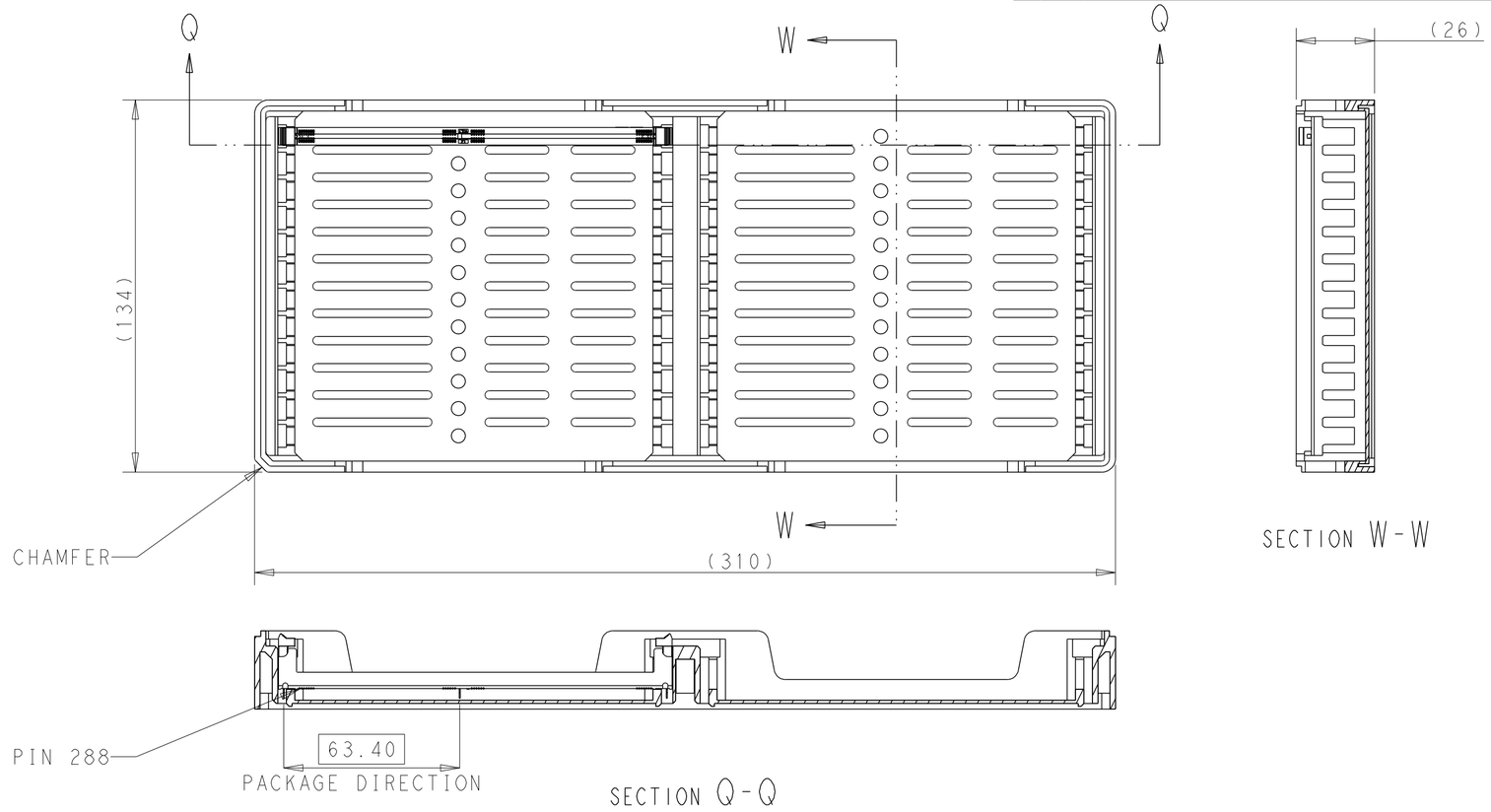

HARD TRAY TYPE I

1. MATERIALS :
   TRAY: HIPS, COLOR: BLACK
   BOX: CORRUGATED FIBERBOARD
   TRANSPARENT BAG: PE
2. DIMENSIONS:
   TRAY: L=310;W=134;H=26
   BOX: L=340;W=300;H=310
3. QUANTITY:
   24 PCS/TRAY
   480 PCS/BOX
4. WEIGHT:
   NET WEIGHT: 2.6KG
   GROSS WEIGHT: 5.8KG

THIS DRAWING IS A CONTROLLED DOCUMENT.

DIMENSIONS: mm

TOLERANCES UNLESS OTHERWISE SPECIFIED:
0 PLC ±-
1 PLC ±0.25
2 PLC ±0.15
3 PLC ±0.10
4 PLC ±-
ANGLES ±-

MATERIAL -
FINISH -

DWN RICHARD MA 17JAN2014
CHK SIMON LI 17JAN2014
APVD COREL WANG 17JAN2014
PRODUCT SPEC 108-115068
APPLICATION SPEC -
WEIGHT -

TE Connectivity

NAME SOCKET ASSEMBLY
DDR4 DIMM,SMT TYPE GENERAL
288 POSITION

SIZE	CAGE CODE	DRAWING NO	RESTRICTED TO
A2	00779	C-2199155	

RESTRICTED CUSTOMER

SCALE 1:1 SHEET 9 OF 14 REV B2

printed on 4 Jan 2021 12:09 from FG086959

THIS DRAWING IS UNPUBLISHED. RELEASED FOR PUBLICATION 20
© COPYRIGHT 20 TE CONNECTIVITY ALL RIGHTS RESERVED.

LOC	DIST
-	-

REVISIONS

P	LTR	DESCRIPTION	DATE	DWN	APVD

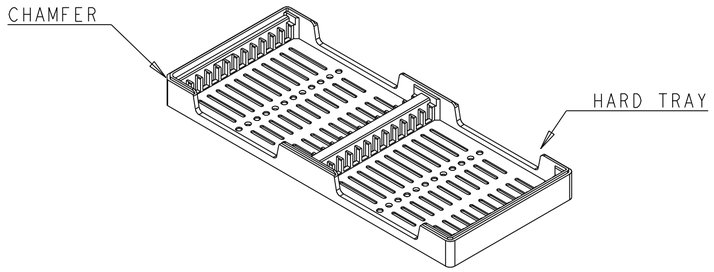

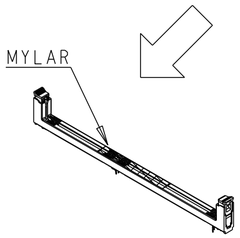

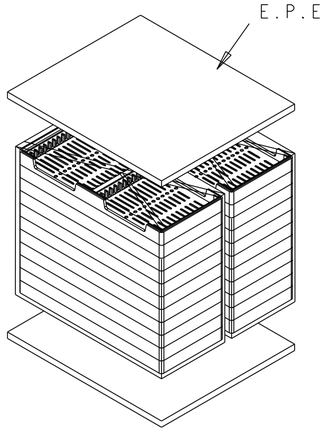

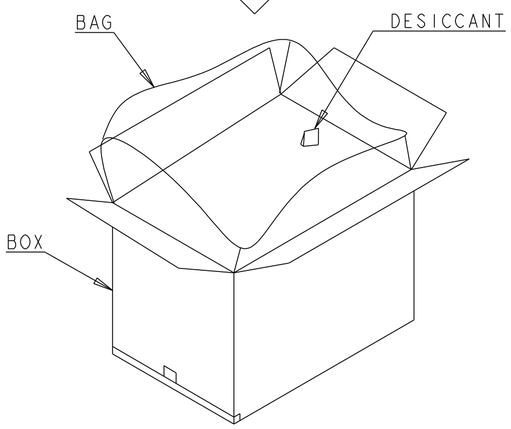

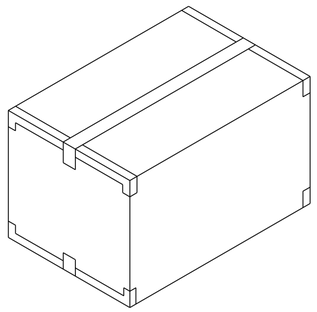

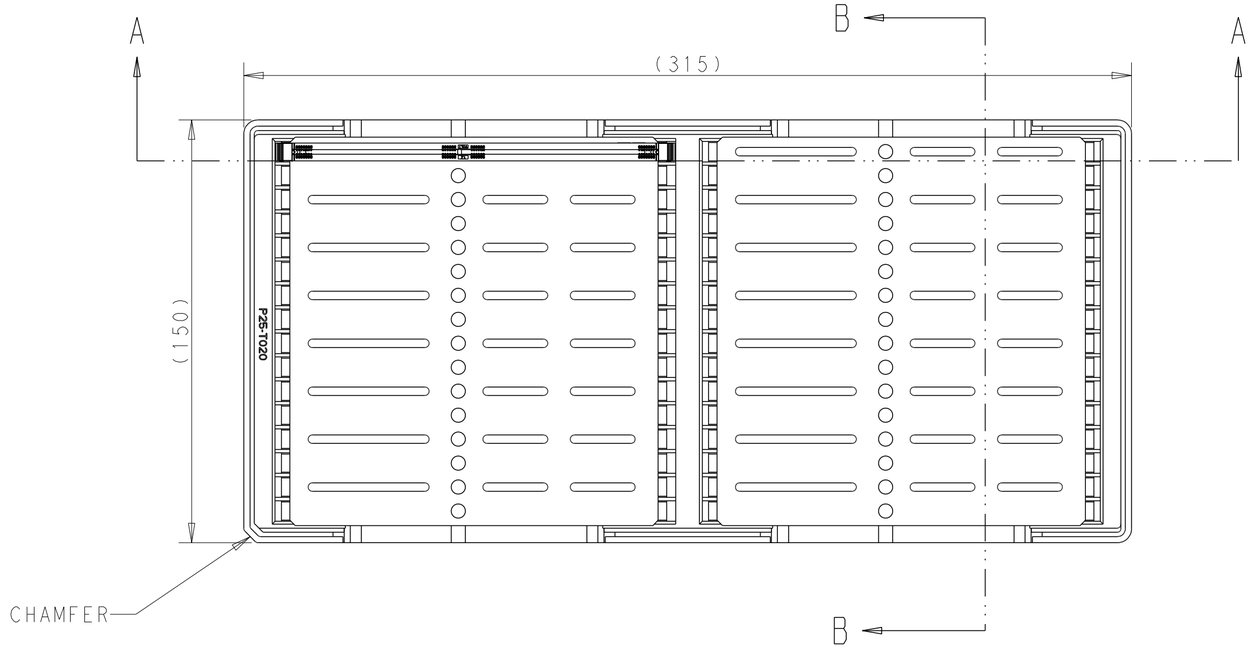

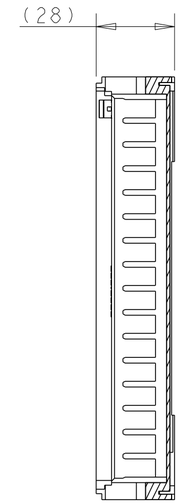

SECTION B-B

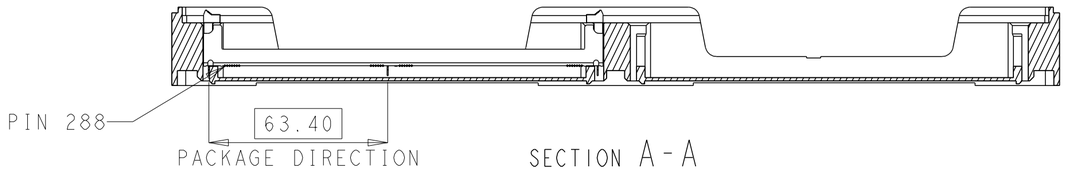

SECTION A-A

HARD TRAY TYPE II

1. MATERIALS :
   TRAY: HIPS, COLOR: BLACK
   BOX: CORRUGATED FIBERBOARD
   TRANSPARENT BAG: PE
2. DIMENSIONS:
   TRAY: L=315;W=150;H=28;PITCH=8.5
   BOX: L=330;W=320;H=335
3. QUANTITY:
   32 PCS/TRAY
   640 PCS/BOX

THIS DRAWING IS A CONTROLLED DOCUMENT.

DIMENSIONS: mm

TOLERANCES UNLESS OTHERWISE SPECIFIED:

0 PLC	±-
1 PLC	±0.25
2 PLC	±0.15
3 PLC	±0.10
4 PLC	±-
ANGLES	±-

MATERIAL -

FINISH -

DWN RICHARD MA 17JAN2014
CHK SIMON LI 17JAN2014
APVD COREL WANG 17JAN2014
PRODUCT SPEC 108-115068
APPLICATION SPEC -
WEIGHT -

TE Connectivity

NAME SOCKET ASSEMBLY DDR4 DIMM,SMT TYPE GENERAL 288 POSITION

SIZE	CAGE CODE	DRAWING NO	RESTRICTED TO
A2	00779	C-2199155	

RESTRICTED CUSTOMER

SCALE 1:1 SHEET 10 OF 14 REV B2

printed on 4 Jan 202| 12:09 from FG086959

THIS DRAWING IS UNPUBLISHED. RELEASED FOR PUBLICATION 20
© COPYRIGHT 20 TE CONNECTIVITY ALL RIGHTS RESERVED.

LOC	DIST
-	-

REVISIONS

P	LTR	DESCRIPTION	DATE	DWN	APVD

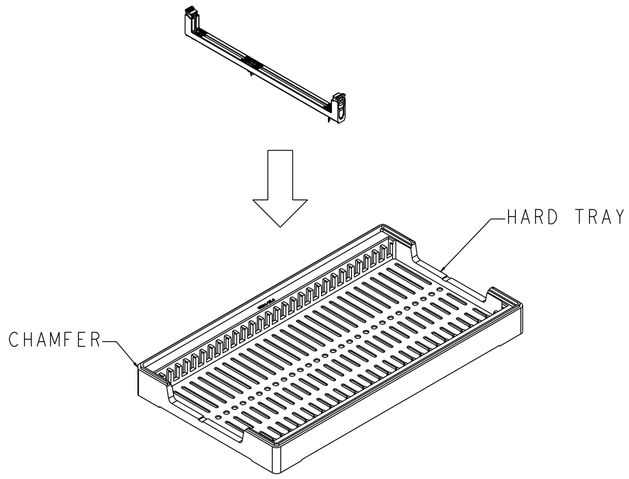

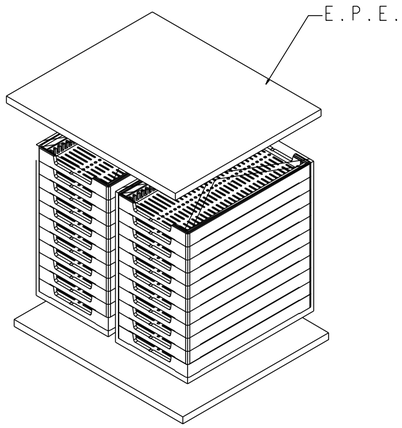

1. MATERIALS :
   TRAY: HIPS, COLOR: BLACK
   BOX: CORRUGATED FIBERBOARD
   TRANSPARENT BAG: PE
2. DIMENSIONS:
   TRAY: L=298;W=170;H=29;PITCH=9.8
   BOX: L=355;W=315;H=350
3. QUANTITY:
   29 PCS/TRAY
   580 PCS/BOX

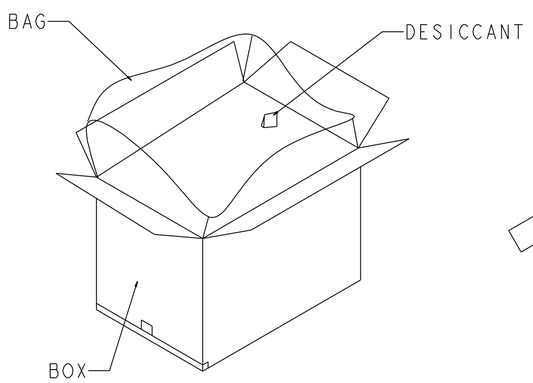

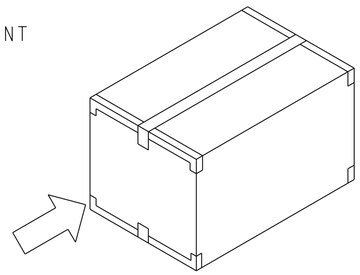

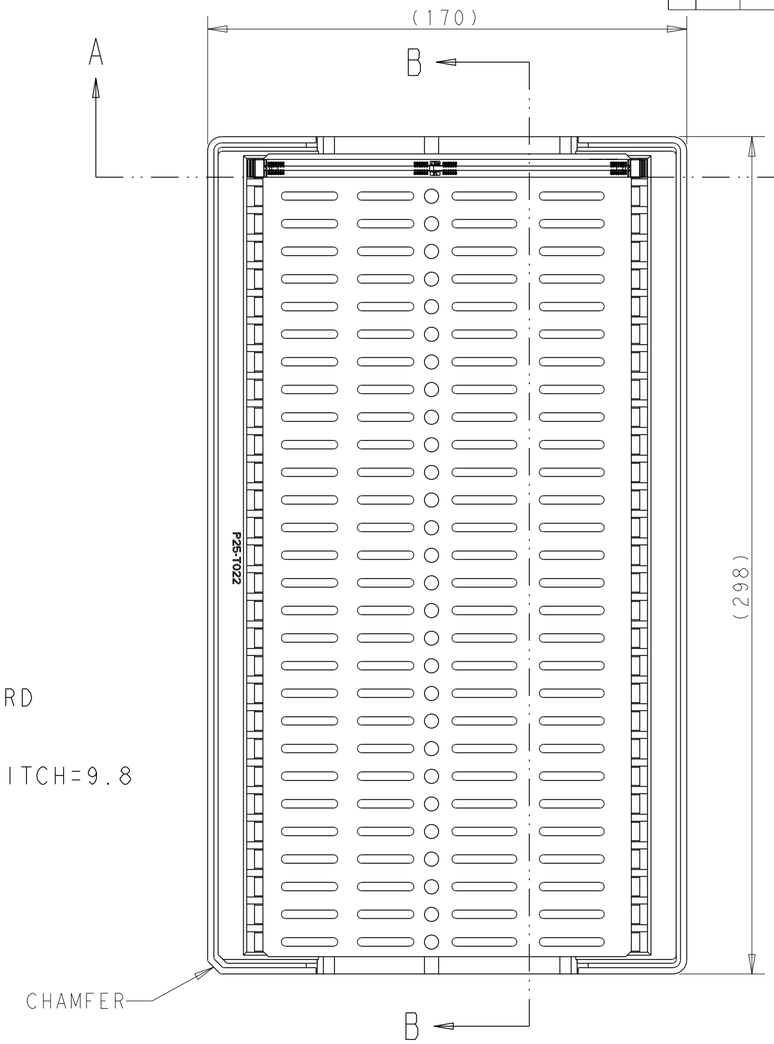

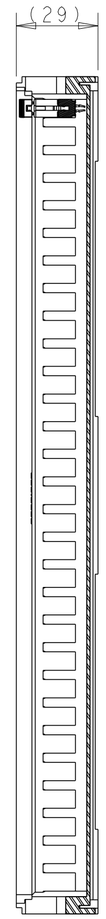

SECTION B-B

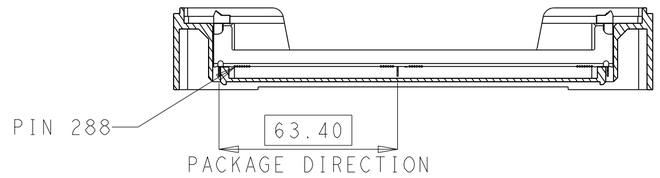

SECTION A-A

HARD TRAY TYPE III

THIS DRAWING IS A CONTROLLED DOCUMENT.

DIMENSIONS: mm

TOLERANCES UNLESS OTHERWISE SPECIFIED:
0 PLC ±-
1 PLC ±0.25
2 PLC ±0.15
3 PLC ±0.10
4 PLC ±-
ANGLES ±-

MATERIAL -
FINISH -

DWN RICHARD MA 17JAN2014
CHK SIMON LI 17JAN2014
APVD COREL WANG 17JAN2014
PRODUCT SPEC 108-115068
APPLICATION SPEC -
WEIGHT -

TE Connectivity

NAME SOCKET ASSEMBLY
DDR4 DIMM,SMT TYPE GENERAL
288 POSITION

SIZE	CAGE CODE	DRAWING NO	RESTRICTED TO
A2	00779	C-2199155	

RESTRICTED CUSTOMER

SCALE 1:1 SHEET 11 OF 14 REV B2

printed on 4 Jan 202 12:09 from FG086959

THIS DRAWING IS UNPUBLISHED. RELEASED FOR PUBLICATION 20
© COPYRIGHT 20 TE CONNECTIVITY ALL RIGHTS RESERVED.

LOC	DIST
-	-

REVISIONS

P	LTR	DESCRIPTION	DATE	DWN	APVD

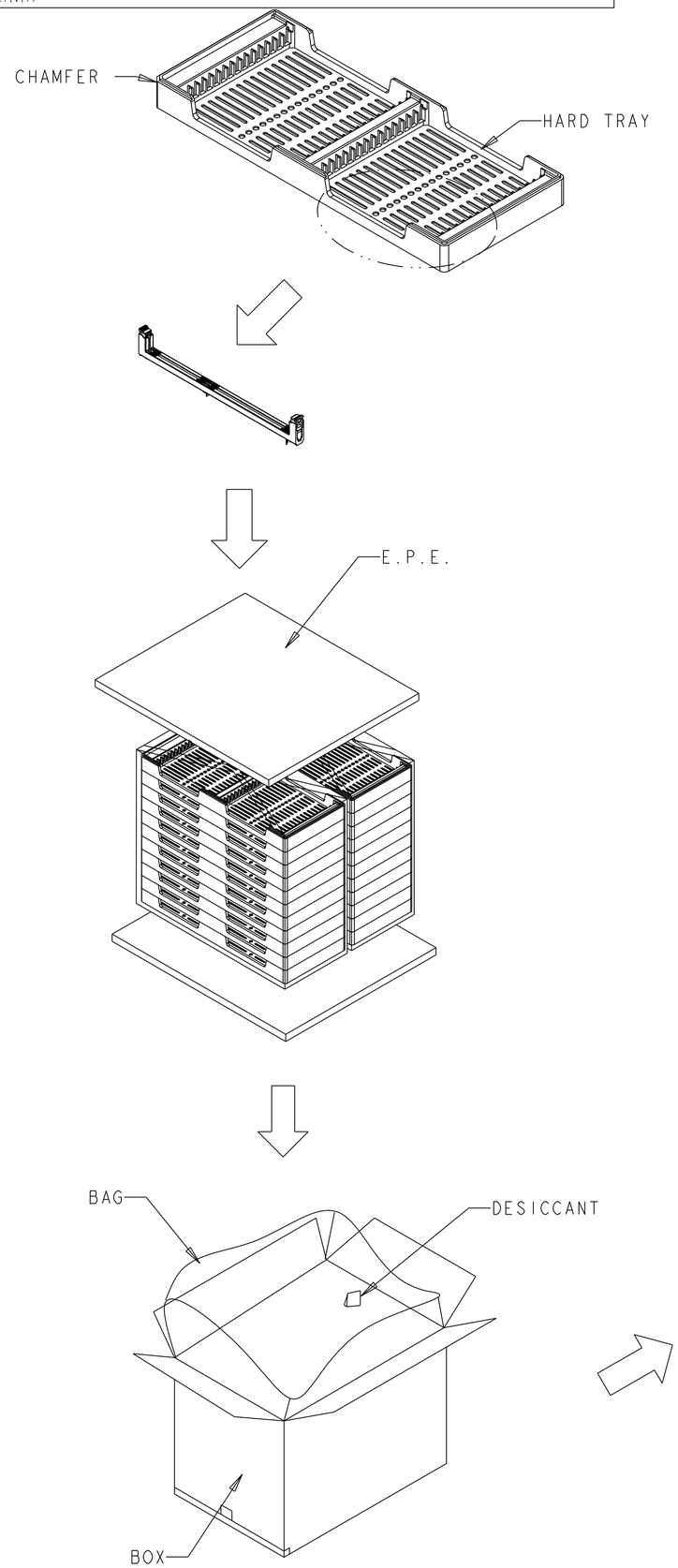

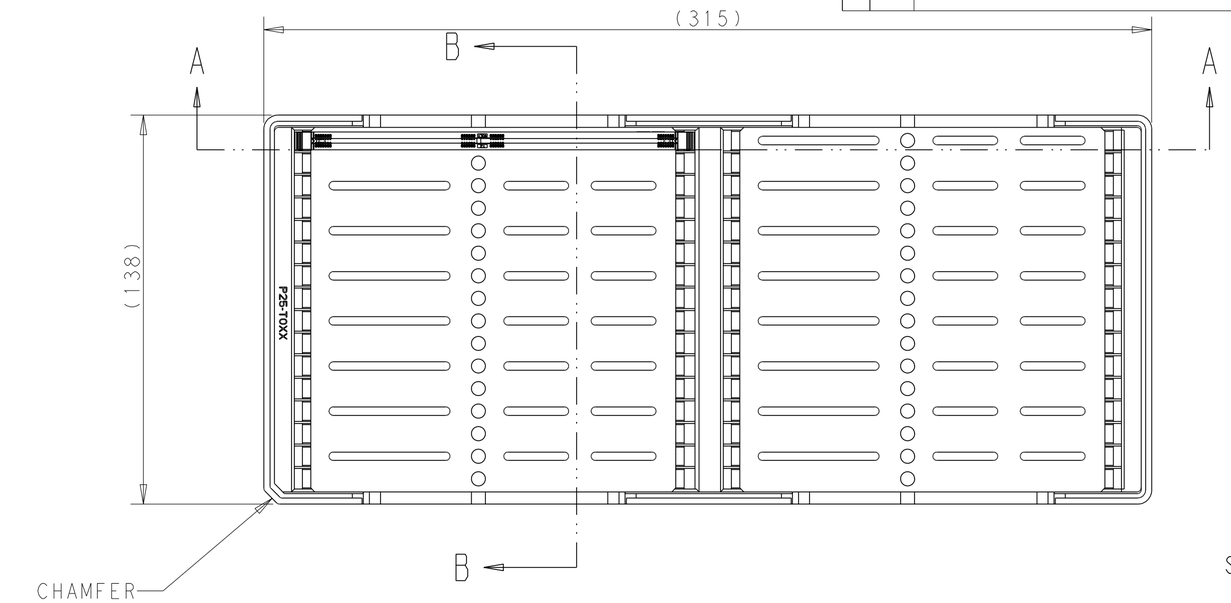

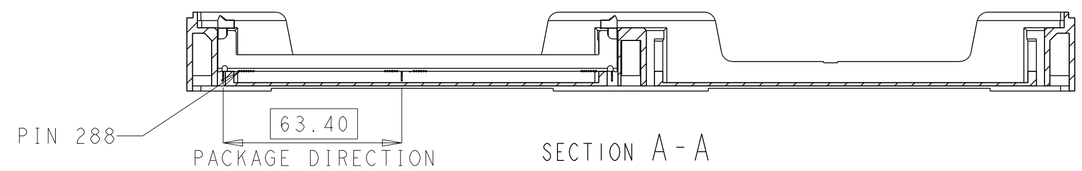

1. MATERIALS :
   TRAY: HIPS, COLOR: BLACK
   BOX: CORRUGATED FIBERBOARD
   TRANSPARENT BAG: PE
2. DIMENSIONS:
   TRAY: L=315;W=138;H=28;PITCH=8.0
   BOX: L=330;W=295;H=335
3. QUANTITY:
   32 PCS/TRAY
   640 PCS/BOX

HARD TRAY TYPE IV

THIS DRAWING IS A CONTROLLED DOCUMENT.

DIMENSIONS: mm

TOLERANCES UNLESS OTHERWISE SPECIFIED:
0 PLC ±-
1 PLC ±0.25
2 PLC ±0.15
3 PLC ±0.10
4 PLC ±-
ANGLES ±-
FINISH -

MATERIAL -

DWN RICHARD MA 17JAN2014
CHK SIMON LI 17JAN2014
APVD COREL WANG 17JAN2014
PRODUCT SPEC 108-115068
APPLICATION SPEC -
WEIGHT -

TE Connectivity

NAME SOCKET ASSEMBLY
DDR4 DIMM,SMT TYPE GENERAL
288 POSITION

SIZE	CAGE CODE	DRAWING NO	RESTRICTED TO
A2	00779	C-2199155	

RESTRICTED CUSTOMER

SCALE 1:1 SHEET 12 OF 14 REV B2

printed on 4 Jan 2021 12:09 from FG086959

THIS DRAWING IS UNPUBLISHED. RELEASED FOR PUBLICATION 20
© COPYRIGHT 20 TE CONNECTIVITY ALL RIGHTS RESERVED.

LOC	DIST
-	-

REVISIONS

P	LTR	DESCRIPTION	DATE	DWN	APVD

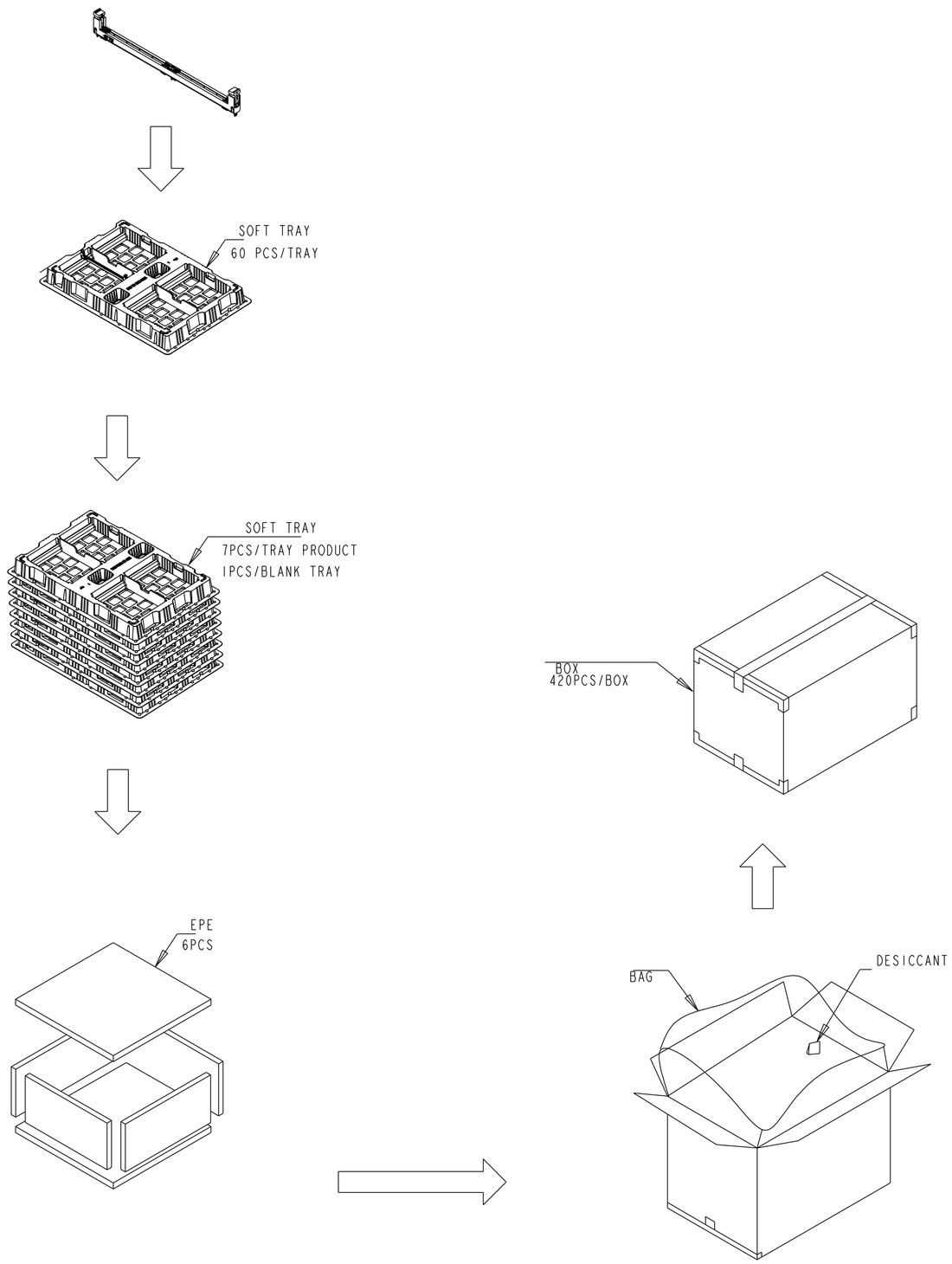

1. MATERIALS :
   TRAY: PVC, COLOR: TRANSPARENT
   BOX: CORRUGATED FIBERBOARD
   TRANSPARENT BAG: PE
2. DIMENSIONS:
   TRAY: L=410;W=270;H=36.3;
   BOX: L=460;W=320;H=290
3. QUANTITY:
   60 PCS/TRAY
   420 PCS/BOX

SOFT TRAY TYPE V

THIS DRAWING IS A CONTROLLED DOCUMENT.

DIMENSIONS: mm

TOLERANCES UNLESS OTHERWISE SPECIFIED:
0 PLC ±-
1 PLC ±0.25
2 PLC ±0.15
3 PLC ±0.10
4 PLC ±-
ANGLES ±-

MATERIAL -
FINISH -

DWN RICHARD MA 17JAN2014
CHK SIMON LI 17JAN2014
APVD COREL WANG 17JAN2014
PRODUCT SPEC 108-115068
APPLICATION SPEC -
WEIGHT -

TE Connectivity

NAME SOCKET ASSEMBLY
DDR4 DIMM,SMT TYPE GENERAL
288 POSITION

SIZE	CAGE CODE	DRAWING NO	RESTRICTED TO
A2	00779	C-2199155	

RESTRICTED CUSTOMER

SCALE 1:1 SHEET 13 OF 14 REV B2

printed on 4 Jan 202 12:09 from FG086959

THIS DRAWING IS UNPUBLISHED. RELEASED FOR PUBLICATION 20
© COPYRIGHT 20 TE CONNECTIVITY ALL RIGHTS RESERVED.

LOC	DIST
-	-

REVISIONS

P	LTR	DESCRIPTION	DATE	DWN	APVD

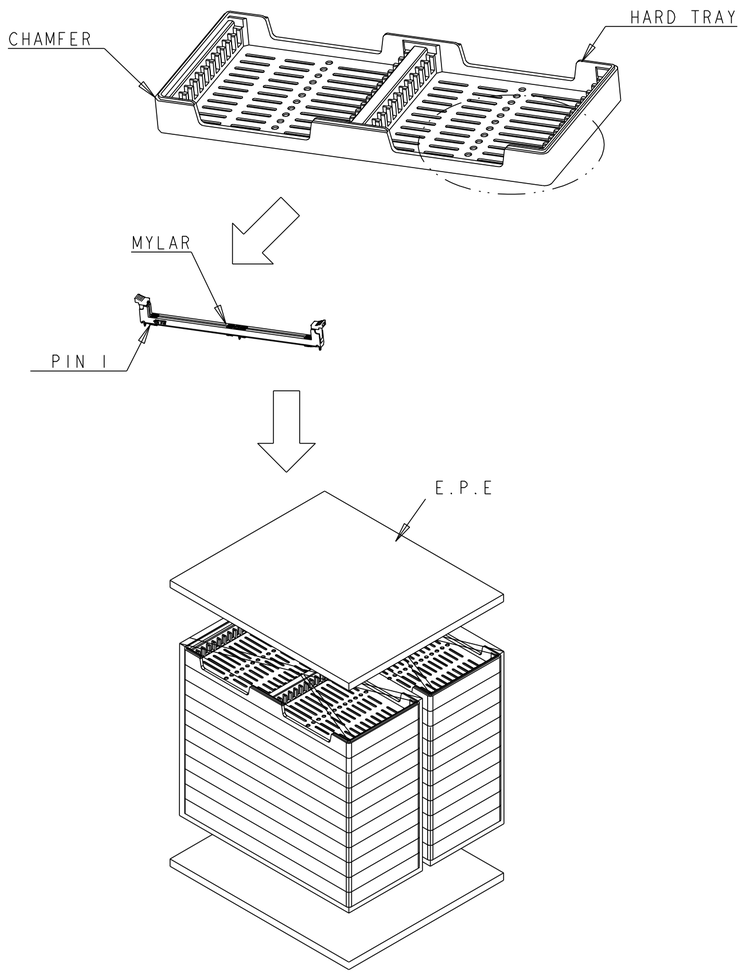

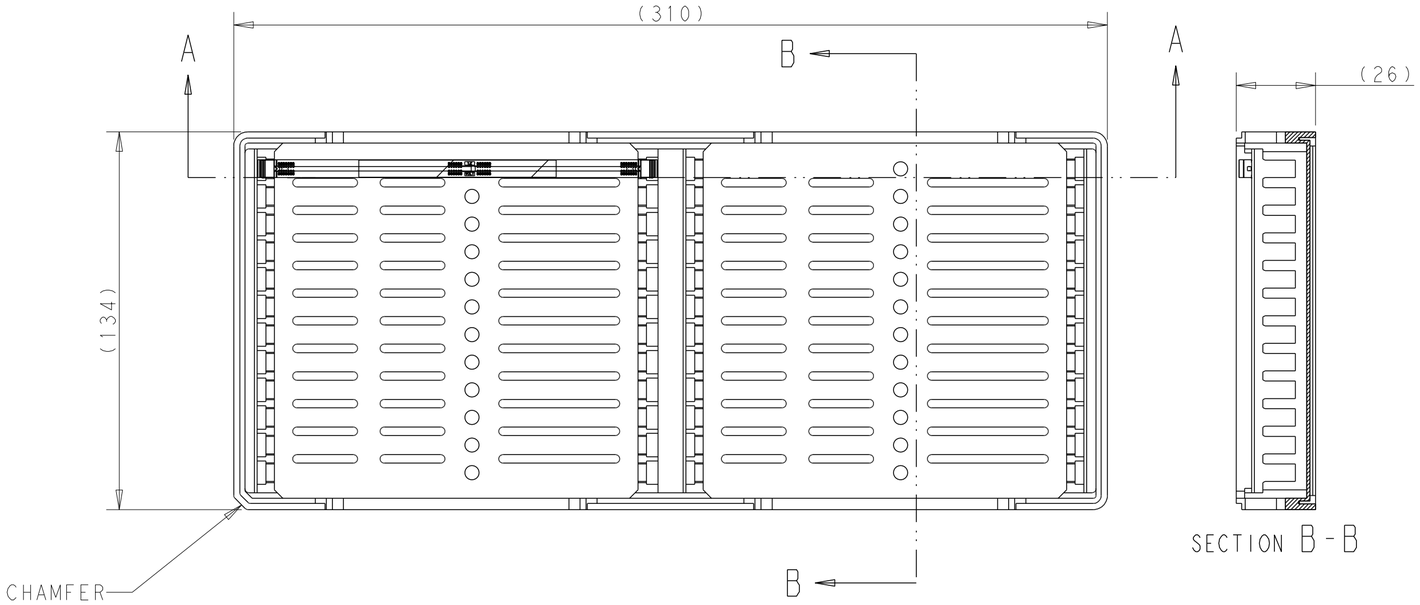

SECTION B-B

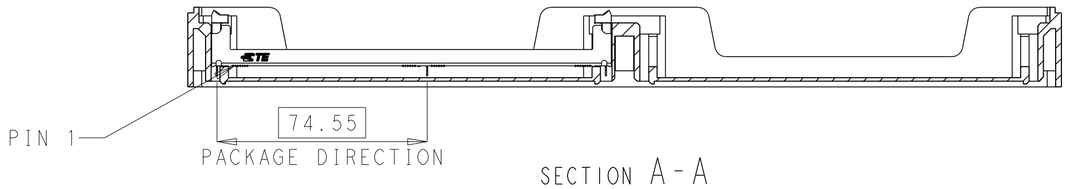

SECTION A-A

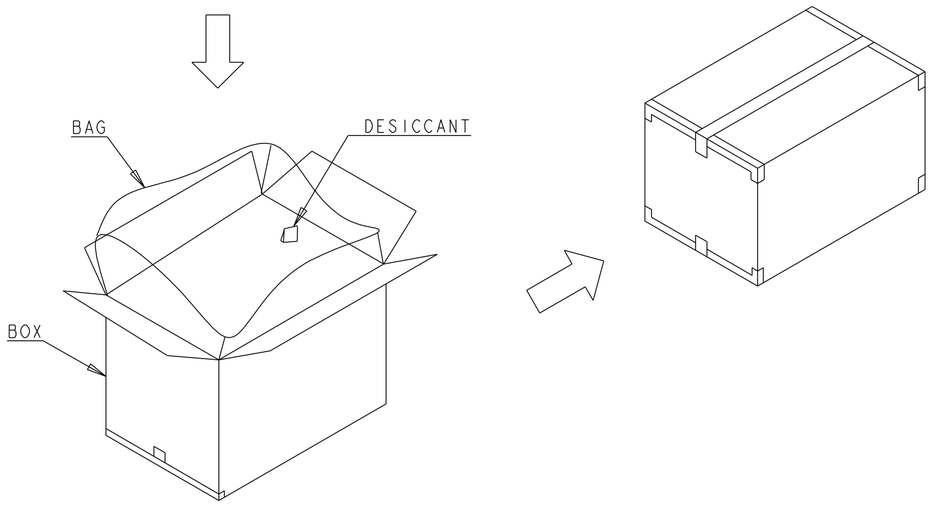

1. MATERIALS :
   TRAY: HIPS, COLOR: BLACK
   BOX: CORRUGATED FIBERBOARD
   TRANSPARENT BAG: PE
2. DIMENSIONS:
   TRAY: L=310;W=134;H=26
   BOX: L=340;W=300;H=310
3. QUANTITY:
   24 PCS/TRAY
   480 PCS/BOX
4. WEIGHT:
   NET WEIGHT: 2.6KG
   GROSS WEIGHT: 5.8KG

HARD TRAY TYPE VI

THIS DRAWING IS A CONTROLLED DOCUMENT.		DWN 17JAN2014 RICHARD MA	TE Connectivity
DIMENSIONS: mm	TOLERANCES UNLESS OTHERWISE SPECIFIED: 0 PLC ±- 1 PLC ±0.25 2 PLC ±0.15 3 PLC ±0.10 4 PLC ±- ANGLES ±-	CHK 17JAN2014 SIMON LI	NAME SOCKET ASSEMBLY DDR4 DIMM,SMT TYPE GENERAL 288 POSITION
		APVD 17JAN2014 COREL WANG	
		PRODUCT SPEC 108-115068	
		APPLICATION SPEC -	SIZE A2 / CAGE CODE 00779 / DRAWING NO C-2199155 / RESTRICTED TO
MATERIAL -	FINISH -	WEIGHT -	
		RESTRICTED CUSTOMER	SCALE 1:1 / SHEET 14 OF 14 / REV B2

printed on 4 Jan 202 12:09 from FG086959