BILL OF MATERIALS				
DET.	QTY.	DESCRIPTION	MATERIAL	PLATING
1	1	BUSHING	BRASS	NICKEL
2	1	NUT	BRASS	NICKEL
3	1	NUT	BRASS	NICKEL

REVISIONS				
SYM	DESCRIPTION	REVISED BY	DATE	APPR

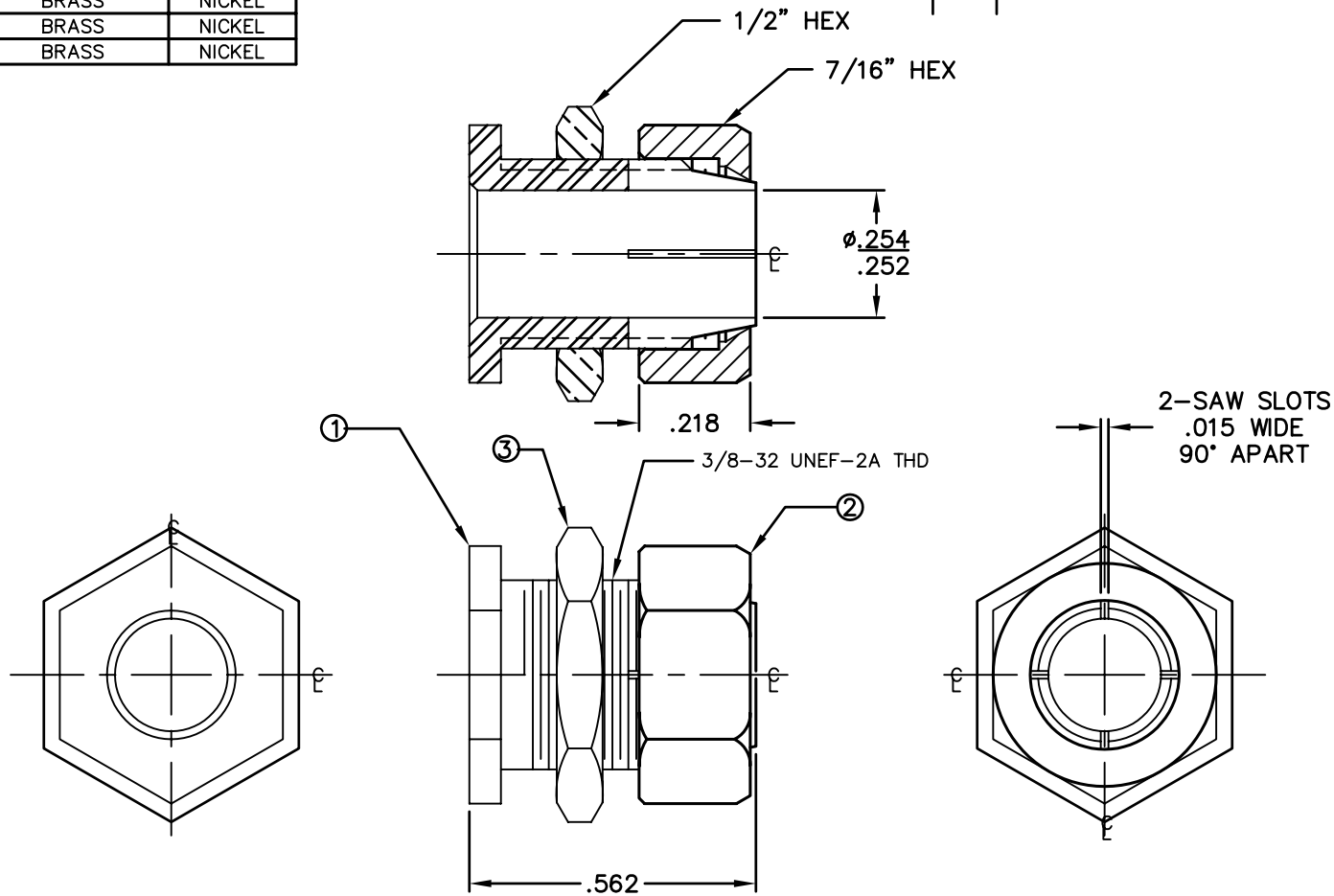

MATERIAL: SEE BOM		FINISH: SEE BOM	HEAT TREAT: ---
DIMENSIONAL TOLERANCES UNLESS OTHERWISE SPECIFIED			TITLE: 114 SHAFT LOCK –
.XX	.XXX	.XXXX	
---	±.005	---	
FRACTIONS	ANGLES	SCALE	
---	---	4:1	
SURFACE FINISH 125			

THIS DRAWING AND THE INFORMATION THEREIN IS THE PROPERTY OF ABBATRON, LLC AND ALL UNAUTHORIZED USE OR REPRODUCTION THEREOF IS PROHIBITED.

DRAWN:	T. LORD	DATE:	1/9/06
CHECKED:	T. LORD	DATE:	1/9/06
APPROVED:	T. LORD	DATE:	1/9/06

ABBATRON
Electronic Connectors and Hardware
632 Arch Street, Meadville, Pa. 16335

SIZE	DRAWING NUMBER	ISSUE
A	SD-114	A