Alle Rechte vorbehalten/ *All rights reserved*

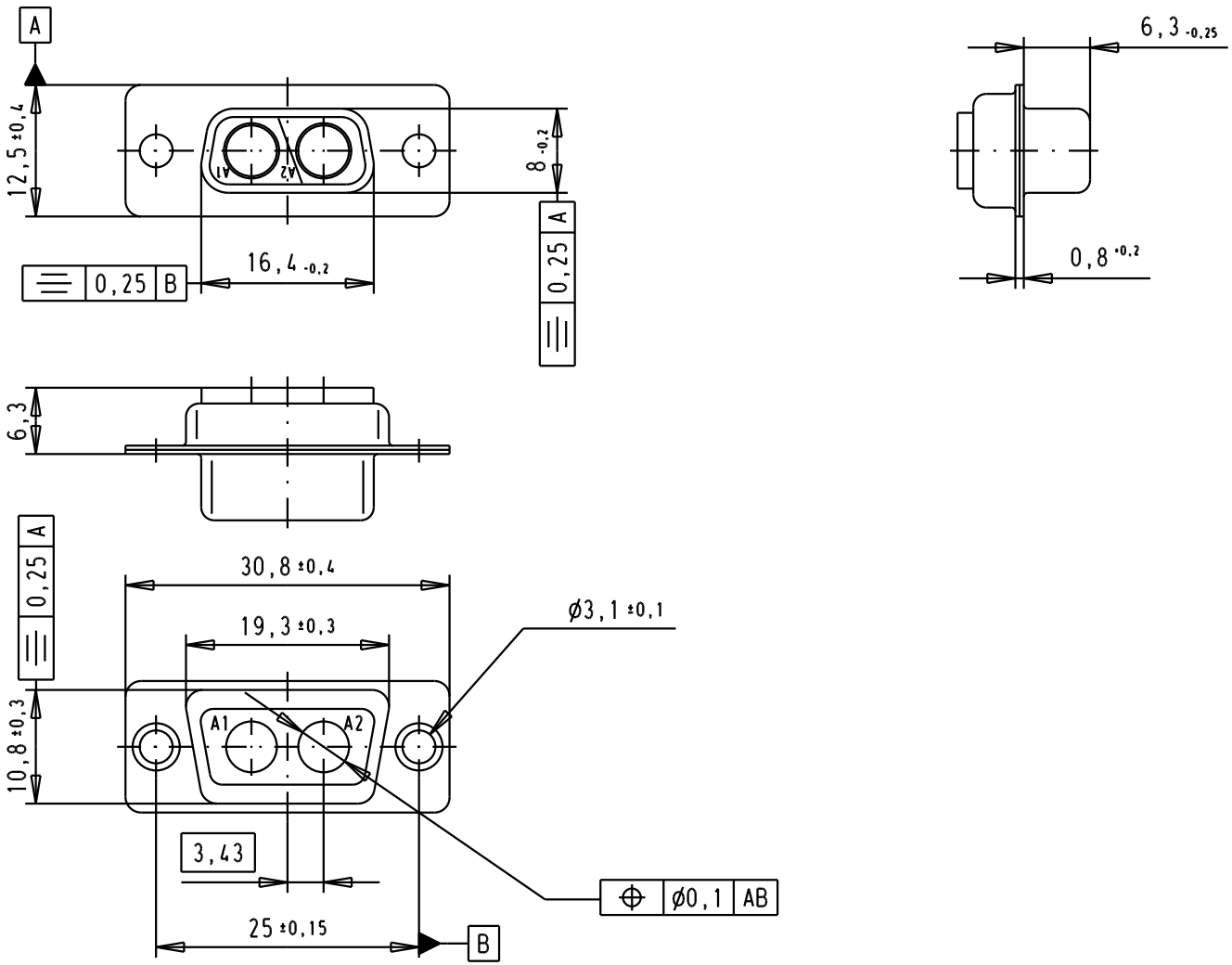

09 69 100 0022.500	Non magnetic					Dat.	Name	All Dim. in mm Orig. Size DIN A 4	D-Sub, female, 2W2, without contacts, with tin plated shell	Maßstab/ *Scale*
					Detail.	21-AUG-02	CV			1.5:1
09 69 100 0022		32119	23/06/04	AC	Insp.					
		31545	24/09/03	AF	Stand.					
Part number		31076	21-AUG-02	CV	HARTING EURL F-95972 Paris				TB 09691000022	Blatt/ *Page* 1
		Mod.	Dat.	Name					Sub.	