Alle Rechte vorbehalten/ *All rights reserved*

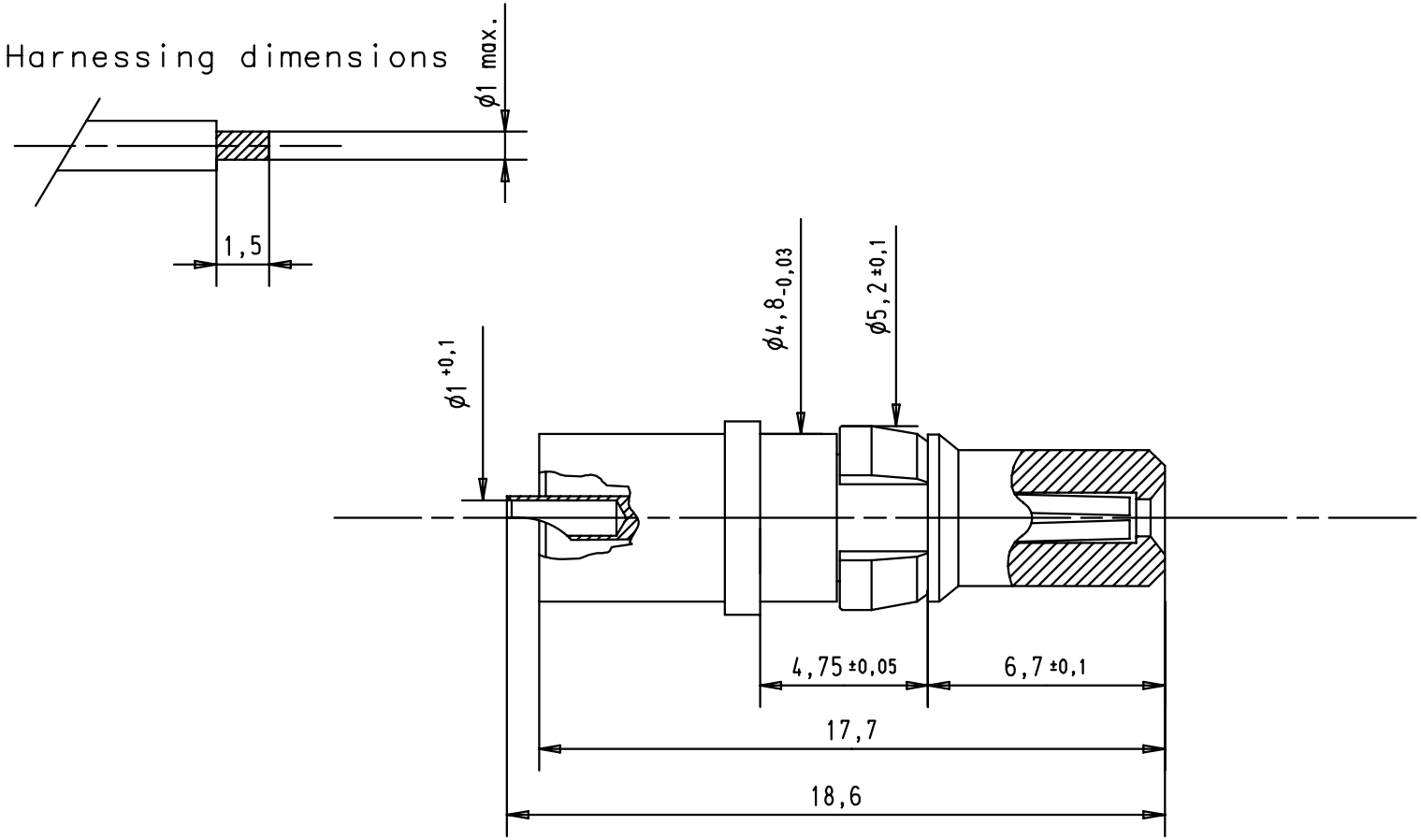

	Plating
Mating area	1,3 µm Au
Termination area	1,3 µm AU

	Dat.	Name
Detail.	02/01/02	AF
Insp.		
Stand.		

All Dim. in mm
Orig. Size DIN A 4

Male High voltage contact, straight cable termination for AWG 20, solder

Maßstab/ *Scale* 5:1

Mod.	Dat.	Name
29742	02/01/02	AF

HARTING EURL
F-95972 Paris

TB 09 69 281 2550

Sub.

Blatt/ *Page* 1/1