REVISIONS					
REV	ECO	DESCRIPTION	DATE	BY	APPR
A1	–	RELEASE NEW DRAWING	15JUL20	VITO	TOMMY

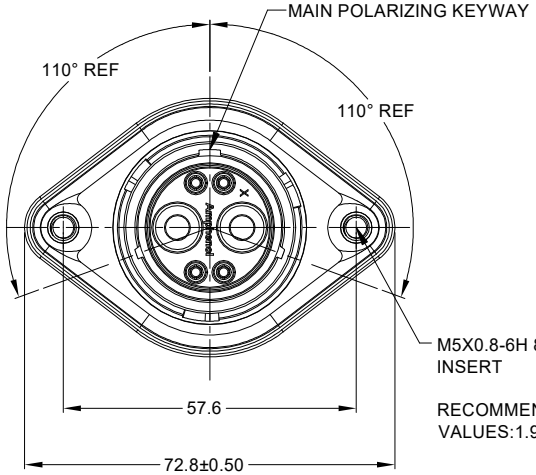

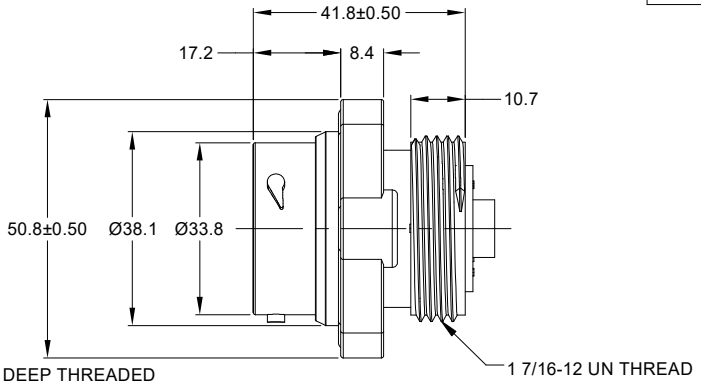

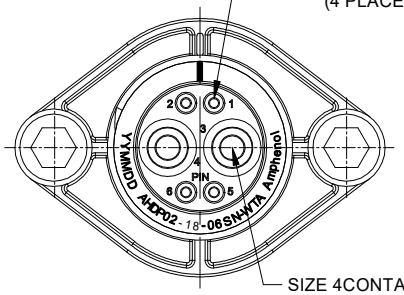

NOTES: UNLESS OTHERWISE SPECIFIED

1. MATERIAL:
   HOUSING: THERMOPLASTIC; BLACK
   SEAL: SILICONE RUBBER
   THREADED INSERT: STAINLESS STEEL

2. MODIFICATIONS: WIDE THREAD ADAPTER(WTA);
   STANDARD DIA,WIRE SEAL;
   SEALED PANEL MOUNT;

3. SPECIFICATIONS:
   3.1 OPERATING TEMPERATURE: -55℃ TO +125℃.
   3.2 DIELECTRIC WITHSTANDING VOLTAGE: LESS THAN 2 MILLIAMPS CURRENT LEAKAGE @ 1500 VOLTS AC.
   3.3 INSULATION RESISTANCE: 1000 MEGOHM MIN @ 25℃.
   3.4 MOISTURE RESISTANCE: IP67&IP69K (MATED CONDITION).
   3.5 MATING CYCLE DURABILITY: 100 CYCLES
   3.6 RoHS COMPLIANT

4. MATING PART: AHDP06-18-06P* (* = SEAL TYPE)(NOT C030 OPTION)

5. ALL DIMENSIONS ARE FOR REFERENCE USE ONLY.

6 CONTACT SIZE AND WIRE RANGE:

CONTACT SIZE	MIN. INSUL O.D.	MAX. INSUL O.D.	TYPICAL WIRE RANGE	CURRENT RATING
16	2.54 mm (.100in)	3.40 mm (.134 in)	14-20 AWG (2.0-0.5mm²)	13 AMPS
4	6.63 mm (.261in)	7.41mm (.292 in)	6 AWG (16-13mm²)	100 AMPS

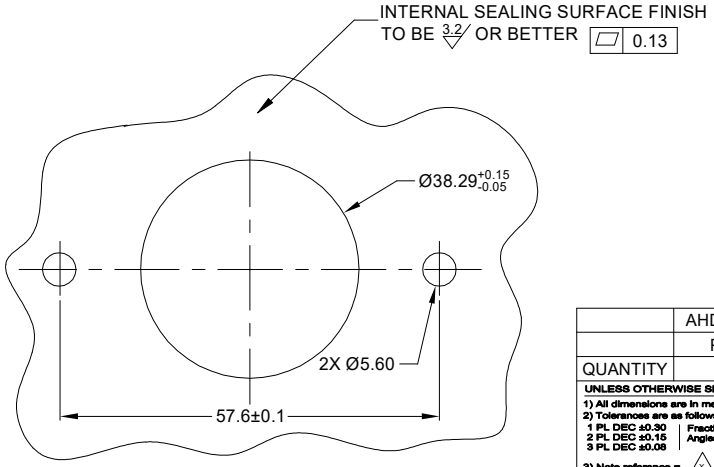

RECOMMENDED PANEL MOUNTING HOLE

RECOMMENDED PANEL THICKNESS:1.6 TO 4.7MM

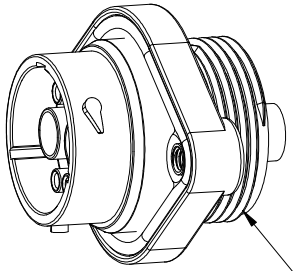

QUANTITY	PART NUMBER	DESCRIPTION	ITEM
	AHDP02-18-06SN-WTA		

MATERIALS LIST

UNLESS OTHERWISE SPECIFIED
1) All dimensions are in metric(mm).
2) Tolerances are as follows:
1 PL DEC ±0.30 | Fractions ±1/64
2 PL DEC ±0.15 | Angles ±1°
3 PL DEC ±0.08
3) Note reference = X

MATERIAL SPECIFICATIONS:

PROCESS SPECIFICATIONS:

NEXT ASS'Y:

SIGNATURES		DATE
DRAWN:	VITO.LI	15JUL20
CHECKED:	ORION.LI	17JUL20
ENGINEER:		
APPROVAL:	TOMMY.XIE	20JUL20
CUSTOMER:		

THIS DRAWING IS SUPPLIED FOR INFORMATION ONLY. DESIGN FEATURES, SPECIFICATIONS AND PERFORMANCE DATA SHOWN HEREON ARE THE PROPERTY OF THE AMPHENOL CORPORATION. NO RIGHTS OF REPRODUCTION ARE IMPLIED. ALL DIMENSIONS ARE SUBJECT TO NORMAL MANUFACTURING VARIATIONS.

Amphenol

Sine Systems - www.amphenol-sine.com
44724 Morley Drive
Clinton Township, MI 48036

6 POS, RECEPTACLE, SOCKET, PANELMATE AHDP SIZE 18, NORMAL SEAL, WTA

SIZE	TYPE	DWG NO:	REVISION
B	C-	AHDP02-18-06SN-WTA	A1

SCALE: NONE SHEET 1 OF 1

TITLE: 6 POS, RECEPTACLE, SOCKET, PANELMATE AHDP SIZE 18, NORMAL SEAL, WTA
DWG NO: AHDP02-18-06SN-WTA
REV: A1
SH: 1
OF: 1