REVISIONS					
REV	ECO	DESCRIPTION	DATE	BY	APPR
A1	–	RELEASE NEW DRAWING	10/SEP/20	IAN	TOMMY

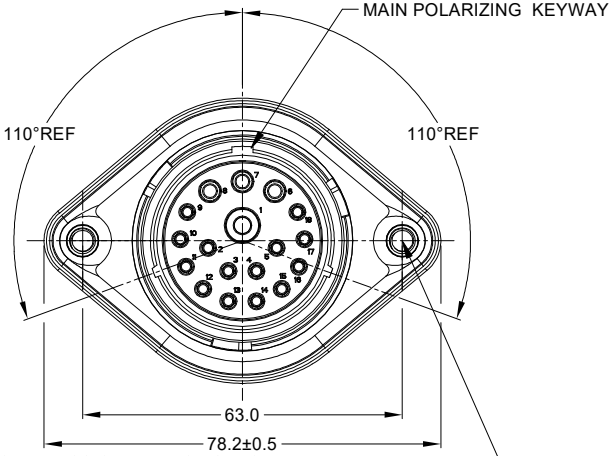

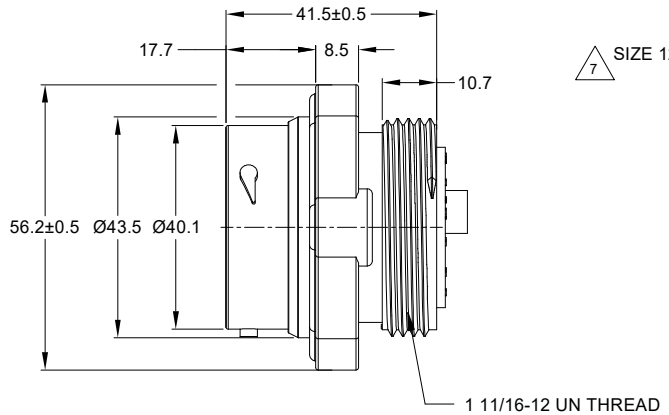

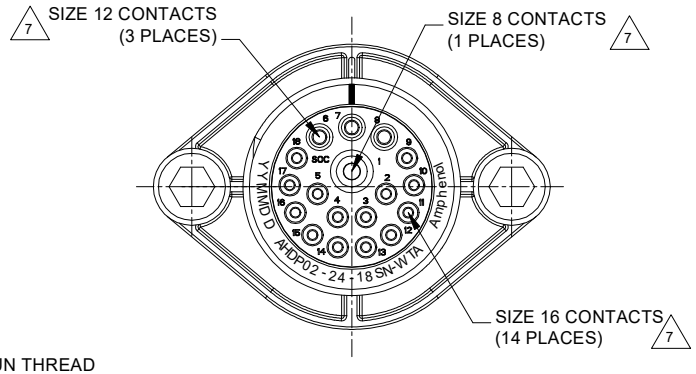

NOTES: UNLESS OTHERWISE SPECIFIED

1. MATERIAL:
   HOUSING: THERMOPLASTIC; BLACK
   SEAL: SILICONE RUBBER

2. MODIFICATIONS: WIDE THREAD ADAPTOR (WTA);
   STANDARD DIA. WIRE SEAL
   SEALED PANEL MOUNT

3. SPECIFICATIONS:
   3.1 OPERATING TEMPERATURE: -55°C TO +125°C.
   3.2 DIELECTRIC WITHSTANDING VOLTAGE: LESS THAN 2 MILLIAMPS CURRENT LEAKAGE @ 1500 VOLTS AC.
   3.3 INSULATION RESISTANCE: 1000 MEGOHM MIN @ 25°C.
   3.4 MOISTURE RESISTANCE: IP67&IP69K (MATED CONDITION).
   3.5 MATING CYCLE DURABILITY: 100 CYCLES
   3.6 RoHS COMPLIANT

4. MATING PART: AHDP06-24-18P* (* = SEAL TYPE)

5. ALL DIMENSIONS ARE FOR REFERENCE USE ONLY.

6. RECEPTACLE IS SUPPLIED WITH DUST CAP(NOT SHOWN).

7. CONTACT SIZE AND WIRE RANGE:

CONTACT SIZE	MIN. INSUL O.D.	MAX. INSUL O.D.	TYPICALWIRE RANGE	CURRENT RATING
8	4.83 mm (.190 in)	6.10 mm (.240 in)	8-10 AWG (10.0-5.0mm²)	60 AMPS
12	3.43 mm (.135 in)	4.32 mm (.170 in)	10-14 AWG (6.0-2.0mm²)	25 AMPS
16	2.54 mm (.100 in)	3.40 mm (.134 in)	14-20 AWG (2.0-0.5mm²)	13 AMPS

M5X0.8-6H 8mm(2X) DEEP
THREADED INSERT

RECOMMENDED TORQUE
VALUES: 1.9-2.2 N.m

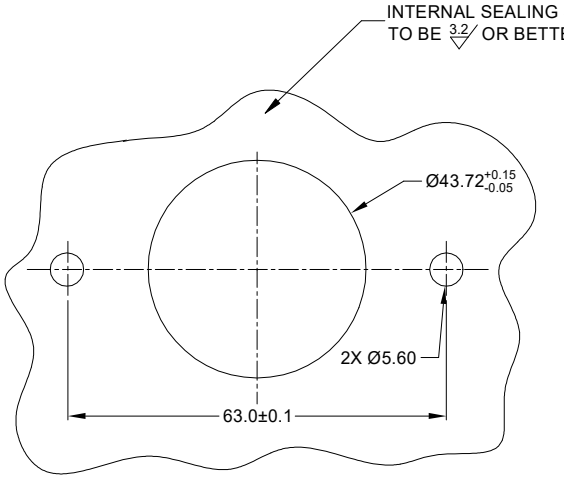

RECOMMENDED PANEL
MOUNTING HOLE

RECOMMENDED PANEL
THICKNESS:1.6 TO 4.7MM

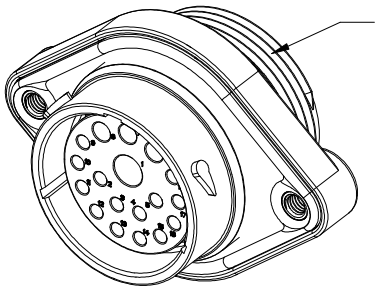

QUANTITY	AHDP02-24-18SN-WTA PART NUMBER	DESCRIPTION	ITEM

MATERIALS LIST

UNLESS OTHERWISE SPECIFIED
1) All dimensions are in metric(mm).
2) Tolerances are as follows:
1 PL DEC ±0.30
2 PL DEC ±0.15
3 PL DEC ±0.08
Fractions ±1/64
Angles ±1°
3) Note reference = X

MATERIAL SPECIFICATIONS:

PROCESS SPECIFICATIONS:

NEXT ASS'Y:

SIGNATURES		DATE
DRAWN:	IAN.XIAO	10/SEP/20
CHECKED:	ORION	11/SEP/20
ENGINEER:		
APPROVAL:	TOMMY	14/SEP/20
CUSTOMER:		

THIS DRAWING IS SUPPLIED FOR INFORMATION ONLY. DESIGN FEATURES, SPECIFICATIONS AND PERFORMANCE DATA SHOWN HEREON ARE THE PROPERTY OF THE AMPHENOL CORPORATION. NO RIGHTS OF REPRODUCTION ARE IMPLIED. ALL DIMENSIONS ARE SUBJECT TO NORMAL MANUFACTURING VARIATIONS.

Amphenol

Sine Systems - www.amphenol-sine.com
44724 Morley Drive
Clinton Township, MI 48036

18 POS, RECEPTACLE, SOCKET, PANELMATE
AHDP SIZE 24, NORMAL SEAL, WTA

SIZE	TYPE	DWG NO:	REVISION
B	C-	AHDP02-24-18SN-WTA	A1

SCALE: NONE | DURAMATE | SHEET 1 OF 1

TITLE: 18 POS, RECEPTACLE, SOCKET, PANELMATE AHDP SIZE 24, NORMAL SEAL, WTA
DWG NO: AHDP02-24-18SN-WTA
REV: A1
SH: 1
OF: 1