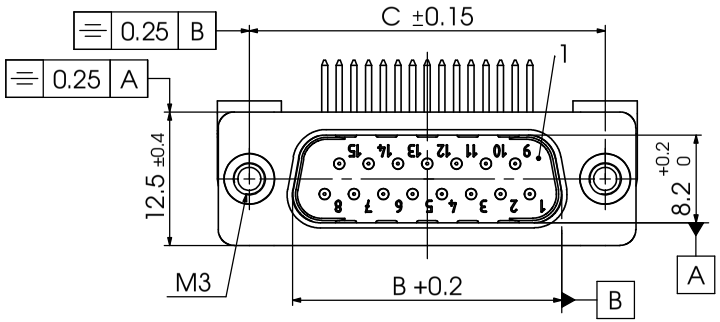

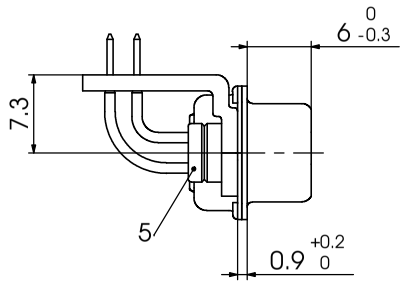

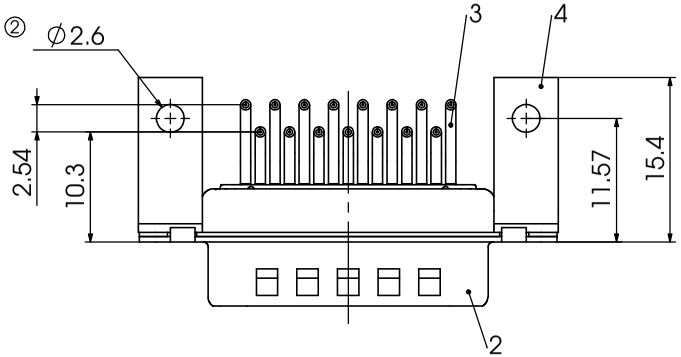

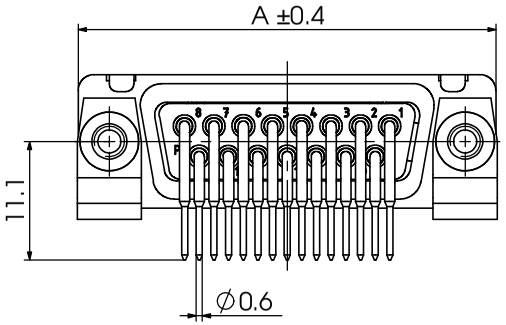

Fxx*1)P5G0-3692

e.g. F15P5G0-3692

*1) xx No. of contacts 09, 15, 25 or 37

xx	A (mm)	B (mm)	C (mm)	*øE (mm)	*G (mm)	*H (mm)	*J (mm)
09	30,8	16,9	25	ø 1	10,67	9,4	2,54
15	39,1	25,2	33,3				
25	53	38,9	47,04				
37	69,3	55,3	63,5				

*PCB hole patterns, øE, G, H, J on supplement AM0024

	No.	St.	Part	Type Description/Material	Surface plating/Colour/Class
	5	2	Clinch nut	MW M3 / Steel	tin plated
②	4	2	Bracket	F1080-24 / Steel	tin plated
	3	xx	Signal contact	P5 / Brass	1,3µm Au
	2	1	Shell	Steel	tin plated
	1	1	Insulator	PBT (-55°C - +125°C)	white

Measurement without tolerance acc. to ISO 2768-m

SCALE 2:1

TITLE: D-Sub Miniature Connector

	NAME / DATE
DRAWN	mpostulka 26-03-2008
CHECKED	sschref 09-04-2008

FCT group
fctgroup.com

DWG.NO. FxxP5G0-3692

REV. 2

REV.	DATE	CH.-NO.
2	08-04-2008	22238
1		

ORIGINAL: DIN A3-DRAWING AS A FILE

REPLACEMENT FOR:

PAGES 1

COMMENT:
ALL RIGHTS ARE RESERVED BY US FOR THIS DRAWING, WITHOUT OUR PRIOR CONSENT,
IT MAY NEITHER BE DUBLICATED NOR MADE AVAILABLE TO A THIRD PARTY,
AND IT ALSO MAY NOT BE IMPROPERLY USED BY TE RECEIVER, OR A THIRD PARTY.