PART NO.	ENGINEERING NO.	FINISHED LENGTH
1300060422	103001A01F030	3FT [0.9M]
1300060433	103001A01F150	15FT [4.6M]
1300060442	103001A01F300	30FT [9.1M]

(C)

(C) PART NUMBER LEGEND

103001A01F030

CABLE LENGTH
F050 = 5 FEET
F100 = 10 FEET
F150 = 15 FEET

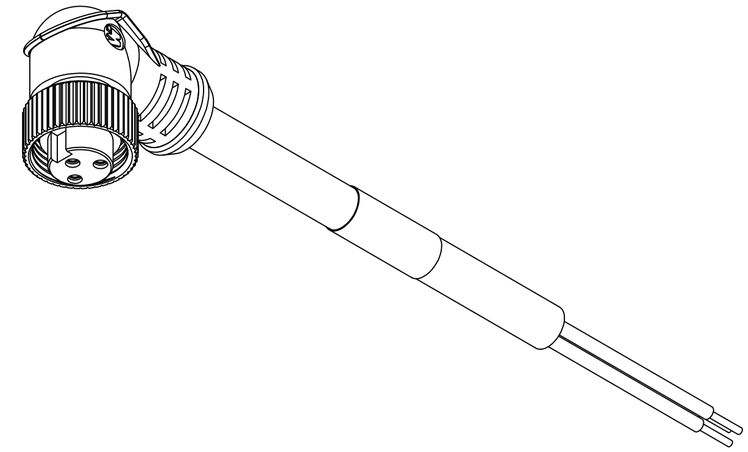

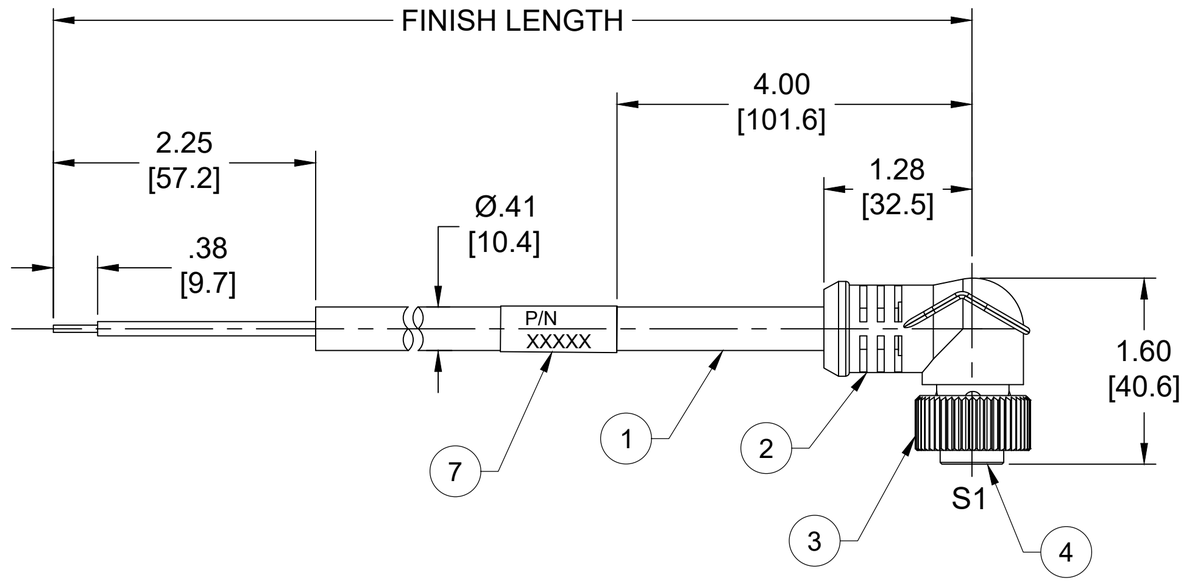

NOTES:
1. MATERIAL: AS NOTED
2. FINISH: AS NOTED
3. ELECTRICAL:
   VOLTAGE : 500V PER IEC 60664 (C)
   600V PER UL 2238
   CURRENT: 13A
4. TEMP RATING: -20° TO +105°C
5. PROTECTION: IP67 (WHEN MATED)
6. COUPLING THREAD: 7/8"-16UN
7. UL RECOGNIZED FILE: E152210
   CSA CERTIFIED FILE: LR6837
8. ALL DIMENSIONS ARE FOR REFERENCE UNLESS TOLERANCED OR NOTED OTHERWISE

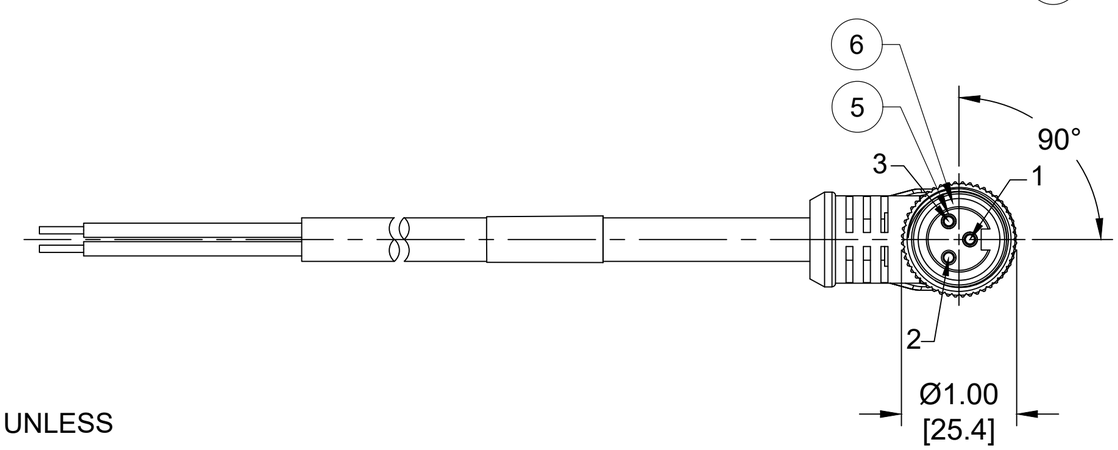

FEMALE FACE VIEW

S1

GREEN/YELLOW-GND	1
BLACK	2
WHITE	3

WIRING DIAGRAM

(C) CABLE LENGTH TOLERANCES
<.3M [1FT]: +19mm-0 [+.75in-0]
.3 - .9M [1 - 3FT]: +44.5mm-0 [+1.75in-0]
.9 - 1.8M [3 - 6FT]: +55.6mm-0 [+2.19in-0]
1.8 - 3.7M [6 - 12FT: +88.9mm-0 [+3.50in-0]
3.7 - 7.3M [12 - 24FT]: +165.1mm-0 [+6.50in-0]
7.3-14.6M [24 - 48FT]: +317.5mm-0 [+12.50in-0]
14.6 - 30.5M [48-100FT]: +622.3mm-0 [+24.50in-0]
OVER 30M [100FT] +2% OF FINISHED LENGTH

ITEM	COMPONENT	MATERIAL	FINISH	
7	WRAP LABEL	VINYL	BLACK/YELLOW	(C)
6	FRICTION RING	NYLON	WHITE	(C)
5	CONTACT SOCKET	COPPER ALLOY	GOLD OVER NICKEL	
4	INSERT	TPE	YELLOW	(C)
3	COUPLING NUT	ZINC DIE CAST	BLACK-E-COAT	
2	OVERMOLD	TPE	YELLOW	(C)
1	CABLE, 16 AWG STOOW/ST	PVC	YELLOW	

THIS DRAWING CONTAINS INFORMATION THAT IS PROPRIETARY TO MOLEX ELECTRONIC TECHNOLOGIES, LLC AND SHOULD NOT BE USED WITHOUT WRITTEN PERMISSION

FUNCTIONAL SYMBOLS: FA=0, FC=0, FP=0
DIVISIONAL SYMBOLS

DIMENSION UNITS: INCH/MM
SCALE: NTS

GENERAL TOLERANCES (UNLESS SPECIFIED)

	mm	INCH
4 PLACES	±----	±----
3 PLACES	±----	±----
2 PLACES	±----	±----
1 PLACE	±----	±----
0 PLACES	±----	±----
ANGULAR TOL ±	---- °	

DRAFT WHERE APPLICABLE MUST REMAIN WITHIN DIMENSIONS

CURRENT REV DESC: ITEM# 2 & 4 WERE PVC. ITEM #7 WAS PLASTIC FILM. ADDED FRICTION RING, IEC VOLTAGE, PN LEGEND & TOL CHART. MODIFIED PN CHART

EC NO: 702709
DRWN: ABENJAMINLW 2021/05/18
CHK'D: RSTONE 2022/04/11
APPR: BWOODMAN 2022/04/16

INITIAL REVISION:
DRWN: TWOLDEGE 2009/07/29
APPR: JFMURPHY 2009/08/10

THIRD ANGLE PROJECTION | DRAWING: C-SIZE | SERIES: 130006

molex

MINI-CHANGE CORDSET, A-SIZE
3-POLE, FEMALE, 90DEG, SINGLE KEY,
#16 AWG

PRODUCT CUSTOMER DRAWING

DOCUMENT NUMBER	DOC TYPE	DOC PART	REVISION
SD-130006-015	PSD	001	C

MATERIAL NUMBER	CUSTOMER	SHEET NUMBER
SEE CHART	GENERAL MARKET	1 OF 1

DOCUMENT STATUS	P1	RELEASE DATE	2022/04/16 16:04:51

FORMAT: IN-ACAD-tb-prod-C
REVISION: B
DATE: 2020/01/14