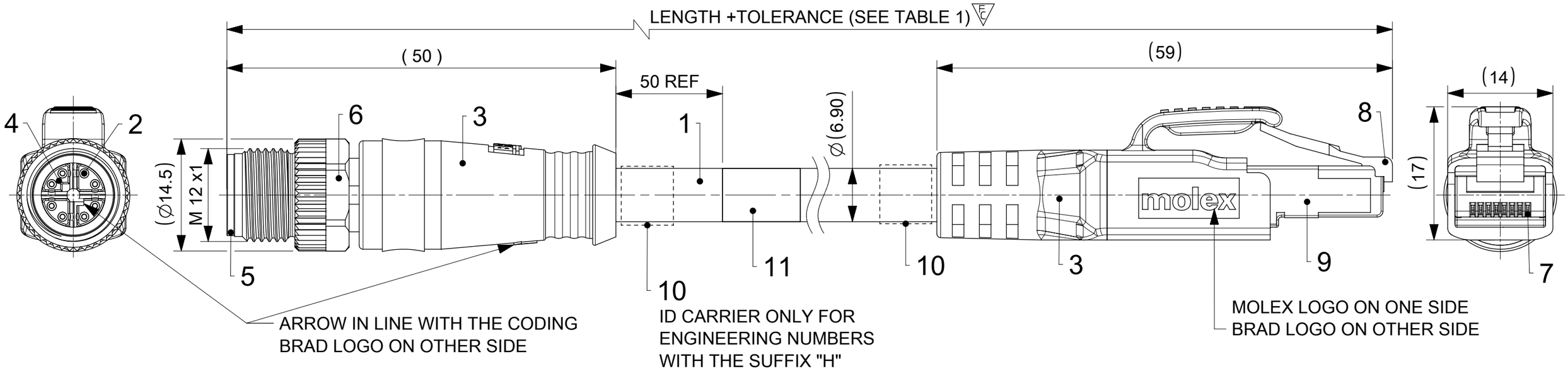

M12 X-CODE
MALE
FRONT VIEW

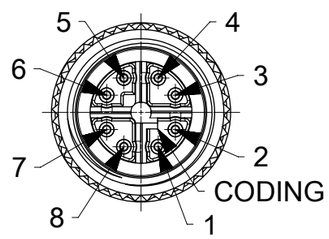

WIRING DIAGRAM

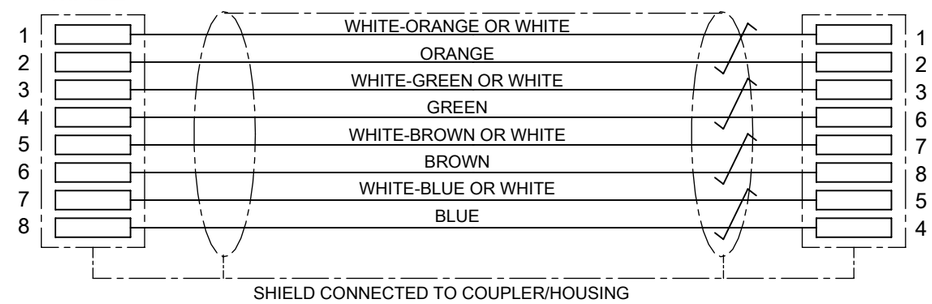

RJ45 PLUG
FRONT VIEW

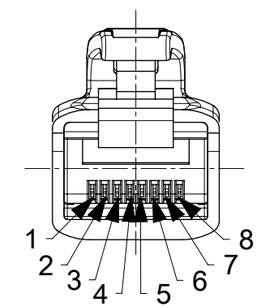

NOTES:
VOLTAGE RATING: 30 V A.C. OR 42 V D.C.
CURRENT RATING: 0.5 A
TEMPERATURE RATING:
STATIC: -40 °C TO 80 °C
DYNAMIC: -20 °C TO 80 °C
IP RATING:
M12 SIDE IP 67 (IN MATED AND LOCKED CONDITION)
RJ45 SIDE IP 20
TRANSMISSION CHARACTERISTICS ACCORDING TO ISO/IEC 11801 CLASS E_A CHANNEL,
WITH INSERTION LOSS BEING IGNORED FOR CABLE LENGTHS ∠1 m OR ∠65 m
PACKAGING: CORDSETS ARE PACKED IN A POLYBAG

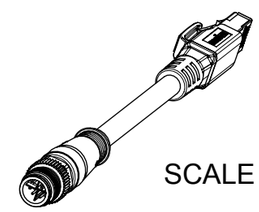

SCALE 1:2

BILL OF MATERIAL

ITEM	QTY	DESCRIPTION	MATERIAL	FINISH/COLOR
1	1	CABLE	PUR	GREEN
2	8	CONTACT 6 MALE	BRASS	Au OVER Ni
3	-	OVERMOLD	TPU	BLACK
4	1	INSERT M12 CAT6A MALE 8P	PA6	BLACK
5	1	SHELL M12 CAT6A	ZINC DIE-CAST	Ni PLATED
6	1	NUT M12 MALE	BRASS	Ni PLATED
7	1	CONTACT RJ45	PHOSPHOR BRONZE	SELECTIVE Au PLATED
8	1	PLUG RJ45	-	-
9	1	SHIELD	BRASS	TIN
10	2	ID CARRIER	PVC	TRANSPARENT
11	1	LABEL 2.0X1.75	VINYL	YELLOW

DOCUMENT STATUS	P1	RELEASE DATE	2022/01/25 10:26:20

THIS DRAWING CONTAINS INFORMATION THAT IS PROPRIETARY TO MOLEX ELECTRONIC TECHNOLOGIES, LLC AND SHOULD NOT BE USED WITHOUT WRITTEN PERMISSION

FUNCTIONAL SYMBOLS: FA = 0, FC = 1, FP = 0
DIVISIONAL SYMBOLS

DIMENSION UNITS	SCALE
mm	2:1

GENERAL TOLERANCES (UNLESS SPECIFIED)

ANGULAR TOL	±	1.0 °
4 PLACES	±	
3 PLACES	±	
2 PLACES	±	0.05
1 PLACE	±	0.3
0 PLACES	±	0.5

DRAFT WHERE APPLICABLE MUST REMAIN WITHIN DIMENSIONS

CURRENT REV DESC: NOTE CHANGED

EC NO: 692351
DRWN: ARPITT 2022/01/18
CHK'D: RSILLER 2022/01/25
APPR: RSILLER 2022/01/25

INITIAL REVISION:
DRWN: FGAIK 2017/06/20
APPR: BBRAUCH 2017/06/27

THIRD ANGLE PROJECTION | DRAWING: A3-SIZE | SERIES: 120341

molex

CSE M12 CAT6A RJ45 8P XC MA STR PUR XM

PRODUCT CUSTOMER DRAWING

DOCUMENT NUMBER	DOC TYPE	DOC PART	REVISION
1203410500	PSD	000	A9

MATERIAL NUMBER	CUSTOMER	SHEET NUMBER
SEE TABLE 1	GENERAL MARKET	1 OF 2

FORMAT: master-Sheet-A3
REVISION: J
DATE: 2020/01/14

TABLE 1

MOLEX PN	ENGINEERING NO.	DESCRIPTION	LENGTH [mm]
1203410500	E26E06020M005	M12 CAT6A M/RJ45 ST/ST PUR GREEN 0.5M	500
1203410501	E26E06020M010	M12 CAT6A M/RJ45 ST/ST PUR GREEN 1M	1000
1203410502	E26E06020M020	M12 CAT6A M/RJ45 ST/ST PUR GREEN 2M	2000
1203410503	E26E06020M030	M12 CAT6A M/RJ45 ST/ST PUR GREEN 3M	3000
1203410504	E26E06020M040	M12 CAT6A M/RJ45 ST/ST PUR GREEN 4M	4000
1203410505	E26E06020M050	M12 CAT6A M/RJ45 ST/ST PUR GREEN 5M	5000
1203410860	E26E06020M070	M12 CAT6A M/RJ45 ST/ST PUR GREEN 7M	7000
1203410506	E26E06020M100	M12 CAT6A M/RJ45 ST/ST PUR GREEN 10M	10000
1203410507	E26E06020M150	M12 CAT6A M/RJ45 ST/ST PUR GREEN 15M	15000
1203410508	E26E06020M200	M12 CAT6A M/RJ45 ST/ST PUR GREEN 20M	20000
1203410511	E26E06020M230	M12 CAT6A M/RJ45 ST/ST PUR GREEN 23M	23000
1203410861	E26E06020M250	M12 CAT6A M/RJ45 ST/ST PUR GREEN 25M	25000
1203410509	E26E06020M300	M12 CAT6A M/RJ45 ST/ST PUR GREEN 30M	30000
1203410510	E26E06020M400	M12 CAT6A M/RJ45 ST/ST PUR GREEN 40M	40000
1203410568	E26E06020M500	M12 CAT6A M/RJ45 ST/ST PUR GREEN 50M	50000
1203410569	E26E06020M600	M12 CAT6A M/RJ45 ST/ST PUR GREEN 60M	60000
1203410570	E26E06020M700	M12 CAT6A M/RJ45 ST/ST PUR GREEN 70M	70000
WITH ID CARRIER			
1203410572	E26E06020M005H	M12 CAT6A M/RJ45 ST/ST PUR GREEN 0.5M	500
1203410573	E26E06020M010H	M12 CAT6A M/RJ45 ST/ST PUR GREEN 1M	1000
1203410574	E26E06020M020H	M12 CAT6A M/RJ45 ST/ST PUR GREEN 2M	2000
1203410575	E26E06020M030H	M12 CAT6A M/RJ45 ST/ST PUR GREEN 3M	3000
1203410576	E26E06020M040H	M12 CAT6A M/RJ45 ST/ST PUR GREEN 4M	4000
1203410577	E26E06020M050H	M12 CAT6A M/RJ45 ST/ST PUR GREEN 5M	5000
1203410936	E26E06020M065H	M12 CAT6A M/RJ45 ST/ST PUR GREEN 6.5M	6500
1203410578	E26E06020M100H	M12 CAT6A M/RJ45 ST/ST PUR GREEN 10M	10000
1203410937	E26E06020M110H	M12 CAT6A M/RJ45 ST/ST PUR GREEN 11M	11000
1203410938	E26E06020M120H	M12 CAT6A M/RJ45 ST/ST PUR GREEN 12M	12000
1203410939	E26E06020M130H	M12 CAT6A M/RJ45 ST/ST PUR GREEN 13M	13000
1203410579	E26E06020M150H	M12 CAT6A M/RJ45 ST/ST PUR GREEN 15M	15000
1203410580	E26E06020M200H	M12 CAT6A M/RJ45 ST/ST PUR GREEN 20M	20000
1203410583	E26E06020M230H	M12 CAT6A M/RJ45 ST/ST PUR GREEN 23M	23000
1203410581	E26E06020M300H	M12 CAT6A M/RJ45 ST/ST PUR GREEN 30M	30000
1203410582	E26E06020M400H	M12 CAT6A M/RJ45 ST/ST PUR GREEN 40M	40000
1203410974	E26E06020M450H	M12 CAT6A M/RJ45 ST/ST PUR GREEN 45M	45000
1203410584	E26E06020M500H	M12 CAT6A M/RJ45 ST/ST PUR GREEN 50M	50000
1203410585	E26E06020M600H	M12 CAT6A M/RJ45 ST/ST PUR GREEN 60M	60000
1203410976	E26E06020M650H	M12 CAT6A M/RJ45 ST/ST PUR GREEN 65M	65000
1203410586	E26E06020M700H	M12 CAT6A M/RJ45 ST/ST PUR GREEN 70M	70000
1203410914	E26E06020M800H	M12 CAT6A M/RJ45 ST/ST PUR GREEN 80M	80000
1203410977	E26E06020M850H	M12 CAT6A M/RJ45 ST/ST PUR GREEN 85M	85000

CABLE LENGTH TOLERANCES

LENGTH	TOLERANCE
0 m - 1 m	+40 mm
>1 m - 5 m	+60 mm
>5 m - 10 m	+80 mm
>10 m - 20 m	+140 mm
>20 m - 30 m	+160 mm
>30 m	+1% length

FUNCTIONAL SYMBOLS
FA = 0
FC = 0
FD = 0
DIVISIONAL SYMBOLS

THIS DRAWING CONTAINS INFORMATION THAT IS PROPRIETARY TO MOLEX ELECTRONIC TECHNOLOGIES, LLC AND SHOULD NOT BE USED WITHOUT WRITTEN PERMISSION

DIMENSION UNITS	SCALE
mm	1:1

GENERAL TOLERANCES (UNLESS SPECIFIED)

ANGULAR TOL	±	1.0 °
4 PLACES	±	
3 PLACES	±	
2 PLACES	±	0.05
1 PLACE	±	0.3
0 PLACES	±	0.5

DRAFT WHERE APPLICABLE MUST REMAIN WITHIN DIMENSIONS

CURRENT REV DESC: NOTE CHANGED

EC NO: 692351
DRWN: ARPITT 2022/01/18
CHK'D: RSILLER 2022/01/25
APPR: RSILLER 2022/01/25

INITIAL REVISION:
DRWN: FGAIK 2017/06/20
APPR: BBRAUCH 2017/06/27

THIRD ANGLE PROJECTION | DRAWING: A3-SIZE | SERIES: 120341

molex

CSE M12 CAT6A RJ45 8P XC MA STR PUR XM

PRODUCT CUSTOMER DRAWING

DOCUMENT NUMBER	DOC TYPE	DOC PART	REVISION
1203410500	PSD	000	A9

MATERIAL NUMBER	CUSTOMER	SHEET NUMBER
SEE TABLE 1	GENERAL MARKET	2 OF 2

DOCUMENT STATUS	P1	RELEASE DATE	2022/01/25 10:26:20

FORMAT: master_Sized-A3
REVISION: J
DATE: 2020/01/14