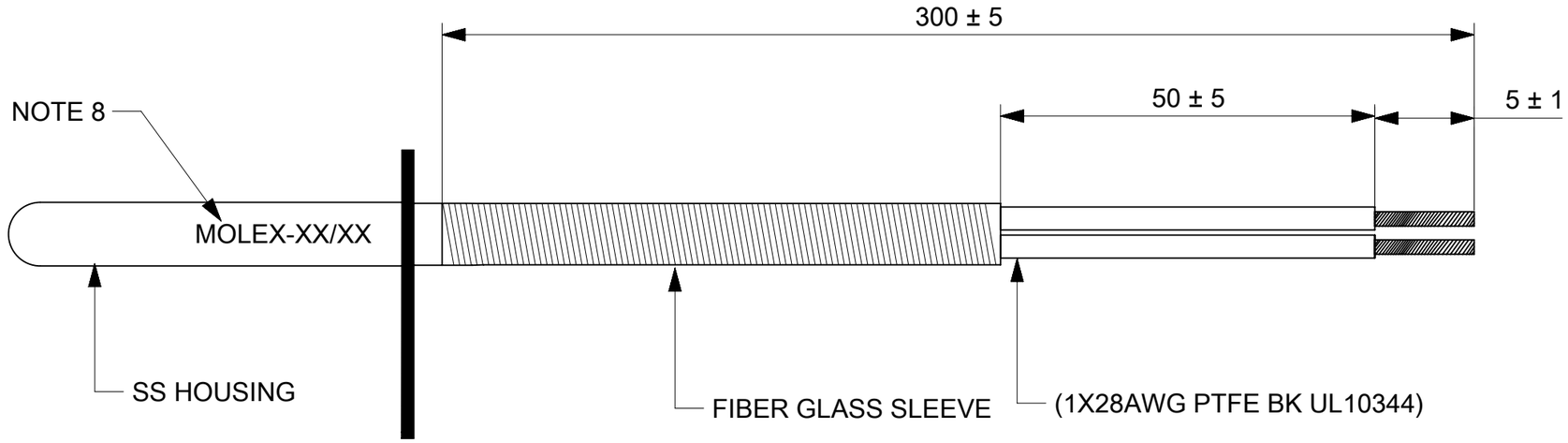

SS HOUSING DETAILS:

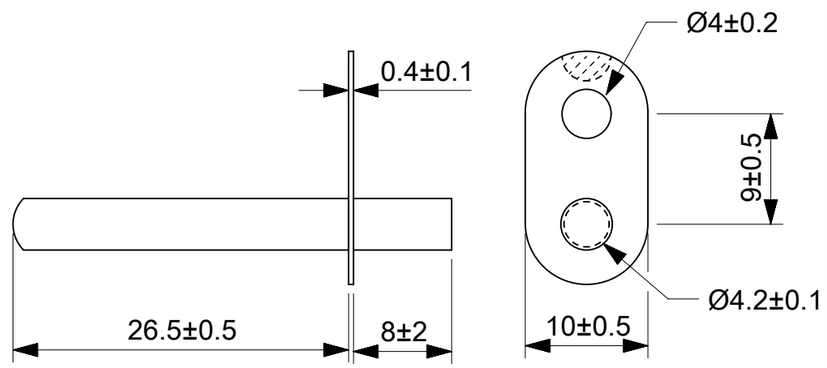

NOTES:

1. RESISTANCE @ 25°C : 10KΩ ± 1%
2. BETA VALUE (0/50°C) : 3892K ± 1%
3. OPERATING TEMPERATURE RANGE : -40°C TO +250°C.
4. THERMAL TIME CONSTANT : 15SEC IN WATER
5. VOLTAGE BREAKDOWN STRENGTH : 1500V AC FOR 3SEC.
6. INSULATION RESISTANCE : A MINIMUM OF 100MΩ @ 500VOLTS DC.
7. DISSIPATION FACTOR : 1mW/°C.
8. LASER MARKING "MOLEX-DATE CODE(MM/YY)"

THIS DRAWING CONTAINS INFORMATION THAT IS PROPRIETARY TO MOLEX ELECTRONIC TECHNOLOGIES, LLC AND SHOULD NOT BE USED WITHOUT WRITTEN PERMISSION

FUNCTIONAL SYMBOLS	DIMENSION UNITS: mm	SCALE: NTS	CURRENT REV DESC:
FA = 0	GENERAL TOLERANCES (UNLESS SPECIFIED)		
FC = 0	ANGULAR TOL ± °		EC NO: 721031
FD = 0	4 PLACES ±		DRWN: NANDAK 2022/09/13
DIVISIONAL SYMBOLS	3 PLACES ±		CHK'D: RBBHASKAR 2022/09/15
	2 PLACES ±		APPR: RBBHASKAR 2022/09/15
	1 PLACE ±		INITIAL REVISION:
	0 PLACES ±		DRWN: RAVIKM 2022/01/28
	DRAFT WHERE APPLICABLE MUST REMAIN WITHIN DIMENSIONS		APPR: RBBHASKAR 2022/02/10

THIRD ANGLE PROJECTION | DRAWING: A3-SIZE | SERIES: 218535

molex

GLASS NTC MOUNTING -10K±1%,B3892,L300

PRODUCT CUSTOMER DRAWING

DOCUMENT NUMBER	DOC TYPE	DOC PART	REVISION
2185353619	PSD	000	B2

MATERIAL NUMBER	CUSTOMER	SHEET NUMBER
2185353619	GENERAL MARKET	1 OF 2

DOCUMENT STATUS	P1	RELEASE DATE	2022/09/15 09:59:08

FORMAT: master_Sized-A3
REVISION: J1
DATE: 2021/05/05

RESISTANCE VS TEMPERATURE CHARACTERISTICS

TEMP (℃)	Rmin(KΩ)	Rnom(KΩ)	Rmax(KΩ)
-40	355.513	339.798	324.748
-35	254.681	244.229	234.182
-30	184.656	177.642	170.877
-25	135.412	130.669	126.080
-20	100.370	97.142	94.008
-15	75.154	72.945	70.795
-10	56.815	55.298	53.817
-05	43.344	42.298	41.276
00	33.352	32.634	31.928
05	25.876	25.383	24.896
10	20.233	19.896	19.562
15	15.939	15.720	15.483
20	12.645	12.492	12.340
25	10.100	10.000	9.900
30	8.154	8.056	7.959
35	6.624	6.531	6.438
40	5.412	5.325	5.239
45	4.446	4.366	4.287
50	3.672	3.600	3.528
55	3.049	2.983	2.917
60	2.5439	2.4839	2.4250
65	2.1325	2.0784	2.0256
70	1.7957	1.7472	1.6998
75	1.5188	1.4752	1.4328
80	1.2900	1.2510	1.2130
85	1.1002	1.0651	1.0311
90	0.9420	0.9106	0.8801
95	0.8096	0.7814	0.7541
100	0.6984	0.6730	0.6486
105	0.6046	0.5818	0.5598
110	0.5252	0.5047	0.4849
115	0.4577	0.4393	0.4215
120	0.4003	0.3836	0.3676
125	0.3511	0.3360	0.3216
130	0.3089	0.2953	0.2822
135	0.2726	0.2602	0.2484
140	0.2412	0.2300	0.2193
145	0.2141	0.2039	0.1941
150	0.1905	0.1812	0.1723

TEMP (℃)	Rmin(KΩ)	Rnom(KΩ)	Rmax(KΩ)
155	0.1700	0.1615	0.1534
160	0.1521	0.1443	0.1369
165	0.1364	0.1293	0.1225
170	0.1226	0.1161	0.1099
175	0.1105	0.1045	0.0988
180	0.0998	0.0943	0.0891
185	0.0903	0.0853	0.0805
190	0.0820	0.0773	0.0729
195	0.0745	0.0702	0.0662
200	0.0679	0.0639	0.0602
205	0.0620	0.0583	0.0548
210	0.0567	0.0533	0.0501
215	0.0520	0.0488	0.0458
220	0.0478	0.0448	0.0420
225	0.0440	0.0412	0.0386
230	0.0406	0.0380	0.0356
235	0.0375	0.0351	0.0328
240	0.0347	0.0324	0.0303
245	0.0322	0.0300	0.0281
250	0.0299	0.0279	0.0260

THIS DRAWING CONTAINS INFORMATION THAT IS PROPRIETARY TO MOLEX ELECTRONIC TECHNOLOGIES, LLC AND SHOULD NOT BE USED WITHOUT WRITTEN PERMISSION

FUNCTIONAL SYMBOLS: FA = 0, FC = 0, FP = 0

DIVISIONAL SYMBOLS

DIMENSION UNITS: mm | SCALE: NTS

GENERAL TOLERANCES (UNLESS SPECIFIED)

ANGULAR TOL	±	°
4 PLACES	±	
3 PLACES	±	
2 PLACES	±	
1 PLACE	±	
0 PLACES	±	

DRAFT WHERE APPLICABLE MUST REMAIN WITHIN DIMENSIONS

CURRENT REV DESC:

EC NO: 721031
DRWN: NANDAK 2022/09/13
CHK'D: RBBHASKAR 2022/09/15
APPR: RBBHASKAR 2022/09/15

INITIAL REVISION:
DRWN: RAVIKM 2022/01/28
APPR: RBBHASKAR 2022/02/10

molex

GLASS NTC MOUNTING -10K±1%,B3892,L300

PRODUCT CUSTOMER DRAWING

DOCUMENT NUMBER	DOC TYPE	DOC PART	REVISION
2185353619	PSD	000	B2

THIRD ANGLE PROJECTION	DRAWING	SERIES	MATERIAL NUMBER	CUSTOMER	SHEET NUMBER
	A3-SIZE	218535	2185353619	GENERAL MARKET	2 OF 2

DOCUMENT STATUS	P1	RELEASE DATE	2022/09/15 09:59:08

FORMAT: master_molex-A3
REVISION: J1
DATE: 2021/05/0