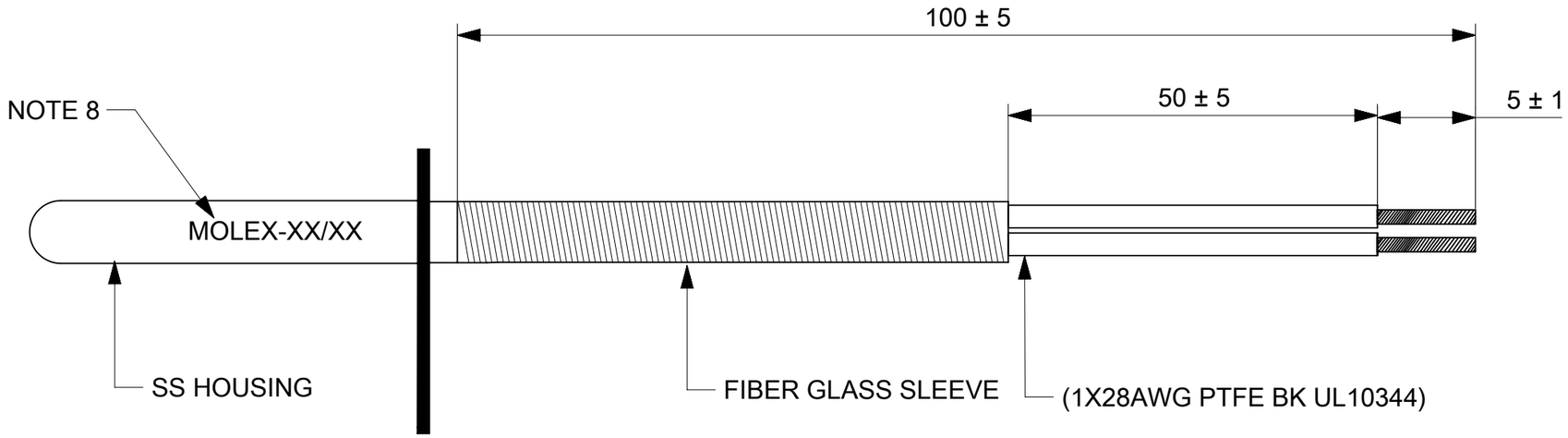

SS HOUSING DETAILS:

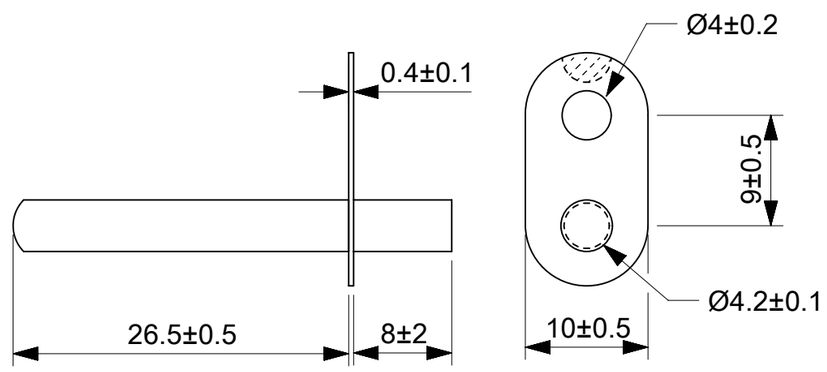

NOTES:

1. RESISTANCE @ 25°C : 10KΩ ± 1%
2. BETA VALUE (0/50°C) : 3600K ± 1%
3. OPERATING TEMPERATURE RANGE : -40°C TO +250°C.
4. THERMAL TIME CONSTANT : 15SEC IN WATER
5. VOLTAGE BREAKDOWN STRENGTH : 1500V AC FOR 3SEC.
6. INSULATION RESISTANCE : A MINIMUM OF 100MΩ @ 500VOLTS DC.
7. DISSIPATION FACTOR : 1mW/°C.
8. LASER MARKING "MOLEX-DATE CODE(MM/YY)"

THIS DRAWING CONTAINS INFORMATION THAT IS PROPRIETARY TO MOLEX ELECTRONIC TECHNOLOGIES, LLC AND SHOULD NOT BE USED WITHOUT WRITTEN PERMISSION

FUNCTIONAL SYMBOLS	DIMENSION UNITS	SCALE
FA = 0	mm	NTS
FC = 0	GENERAL TOLERANCES (UNLESS SPECIFIED)	
FP = 0	ANGULAR TOL ± °	
DIVISIONAL SYMBOLS	4 PLACES ±	
	3 PLACES ±	
	2 PLACES ±	
	1 PLACE ±	
	0 PLACES ±	
	DRAFT WHERE APPLICABLE MUST REMAIN WITHIN DIMENSIONS	

CURRENT REV DESC:

EC NO: 721031
DRWN: NANDAK 2022/09/13
CHK'D: RBBHASKAR 2022/09/15
APPR: RBBHASKAR 2022/09/15

INITIAL REVISION:
DRWN: RAVIKM 2022/01/28
APPR: RBBHASKAR 2022/02/10

molex

GLASS NTC MOUNTING -10K±1%,B3600,L100

PRODUCT CUSTOMER DRAWING

DOCUMENT NUMBER	DOC TYPE	DOC PART	REVISION
2185343617	PSD	000	B2

THIRD ANGLE PROJECTION	DRAWING	SERIES	MATERIAL NUMBER	CUSTOMER	SHEET NUMBER
	A3-SIZE	218534	2185343617	GENERAL MARKET	1 OF 2

DOCUMENT STATUS	P1	RELEASE DATE	2022/09/15 09:59:07

FORMAT: master_Sized-A3
REVISION: J1
DATE: 2021/05/05

RESISTANCE VS TEMPERATURE CHARACTERISTICS

TEMP (°C)	Rmin(KΩ)	Rnom(KΩ)	Rmax(KΩ)
-40	224.87	234.42	244.35
-35	169.65	176.35	183.30
-30	129.00	133.73	138.61
-25	98.843	102.19	105.64
-20	76.292	78.668	81.111
-15	59.302	60.994	62.728
-10	46.409	47.615	48.848
-05	36.558	37.418	38.294
00	28.980	29.592	30.214
05	23.114	23.548	23.988
10	18.543	18.850	19.159
15	14.961	15.176	15.391
20	12.138	12.286	12.434
25	9.900	10.000	10.100
30	8.084	8.182	8.280
35	6.635	6.728	6.823
40	5.472	5.560	5.649
45	4.535	4.617	4.699
50	3.776	3.851	3.927
55	3.158	3.227	3.296
60	2.653	2.715	2.778
65	2.238	2.295	2.352
70	1.896	1.947	1.999
75	1.613	1.659	1.706
80	1.377	1.419	1.461
85	1.181	1.218	1.256
90	1.016	1.050	1.084
95	0.8773	0.9076	0.9390
100	0.7602	0.7876	0.8160
105	0.6610	0.6858	0.7115
110	0.5766	0.5991	0.6223
115	0.5047	0.5250	0.5461
120	0.4431	0.4615	0.4807
125	0.3902	0.4069	0.4244
130	0.3446	0.3599	0.3758
135	0.3053	0.3191	0.3336
140	0.2711	0.2838	0.2970
145	0.2415	0.2531	0.2652
150	0.2156	0.2262	0.2373

TEMP (□)	Rmin(KΩ)	Rnom(KΩ)	Rmax(KΩ)
155	0.1931	0.2028	0.2129
160	0.1733	0.1822	0.1915
165	0.1559	0.1640	0.1726
170	0.1405	0.1481	0.1560
175	0.1270	0.1339	0.1412
180	0.1150	0.1214	0.1281
185	0.1044	0.1103	0.1165
190	0.0949	0.1004	0.1062
195	0.0865	0.0915	0.0969
200	0.0789	0.0836	0.0886

THIS DRAWING CONTAINS INFORMATION THAT IS PROPRIETARY TO MOLEX ELECTRONIC TECHNOLOGIES, LLC AND SHOULD NOT BE USED WITHOUT WRITTEN PERMISSION

FUNCTIONAL SYMBOLS: F/A = 0, F/C = 0, F/B = 0

DIVISIONAL SYMBOLS

DIMENSION UNITS: mm
SCALE: NTS

GENERAL TOLERANCES (UNLESS SPECIFIED)

ANGULAR TOL	± °
4 PLACES	±
3 PLACES	±
2 PLACES	±
1 PLACE	±
0 PLACES	±

DRAFT WHERE APPLICABLE MUST REMAIN WITHIN DIMENSIONS

CURRENT REV DESC:

EC NO: 721031
DRWN: NANDAK 2022/09/13
CHK'D: RBBHASKAR 2022/09/15
APPR: RBBHASKAR 2022/09/15

INITIAL REVISION:
DRWN: RAVIKM 2022/01/28
APPR: RBBHASKAR 2022/02/10

THIRD ANGLE PROJECTION | DRAWING: A3-SIZE | SERIES: 218534

molex

GLASS NTC MOUNTING -10K±1%,B3600,L100

PRODUCT CUSTOMER DRAWING

DOCUMENT NUMBER	DOC TYPE	DOC PART	REVISION
2185343617	PSD	000	B2

MATERIAL NUMBER	CUSTOMER	SHEET NUMBER
2185343617	GENERAL MARKET	2 OF 2

DOCUMENT STATUS	P1	RELEASE DATE	2022/09/15 09:59:07

FORMAT: master-landscape-A3
REVISION: J1
DATE: 2021/05/06