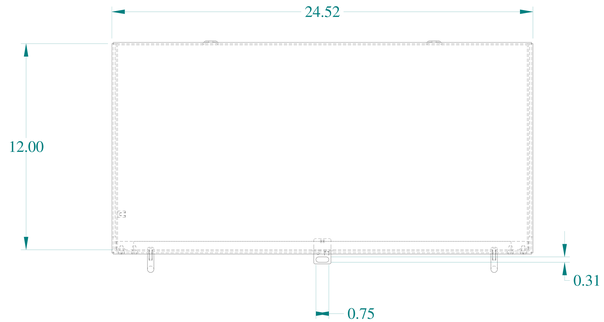


TOP VIEW

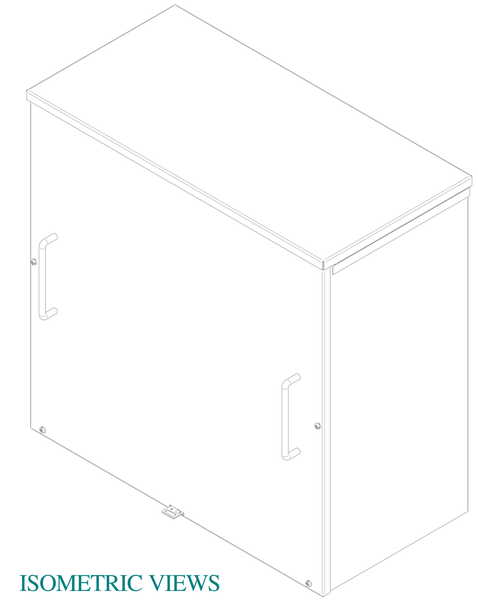

ISOMETRIC VIEWS

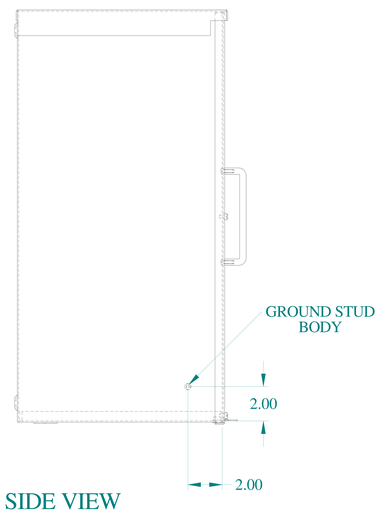


SIDE VIEW

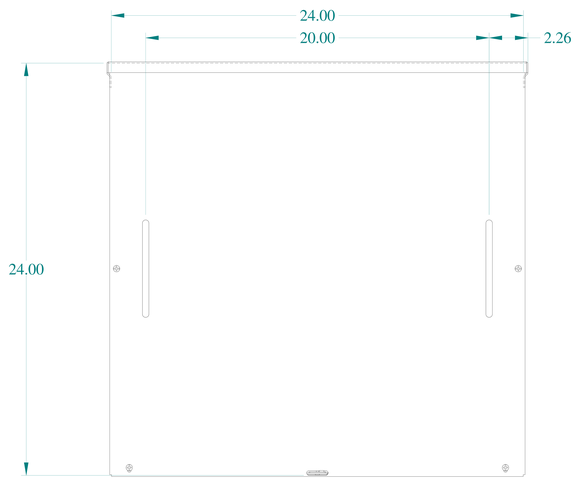


FRONT VIEW

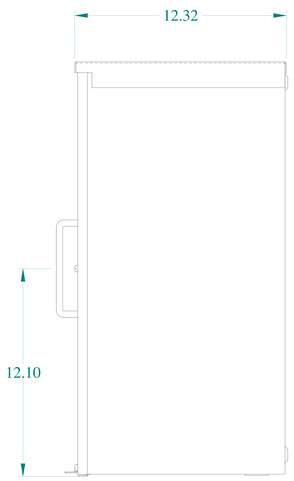


SIDE VIEW

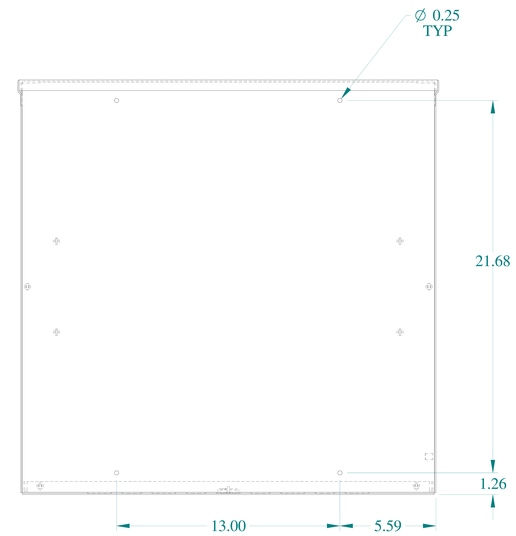


BACK VIEW

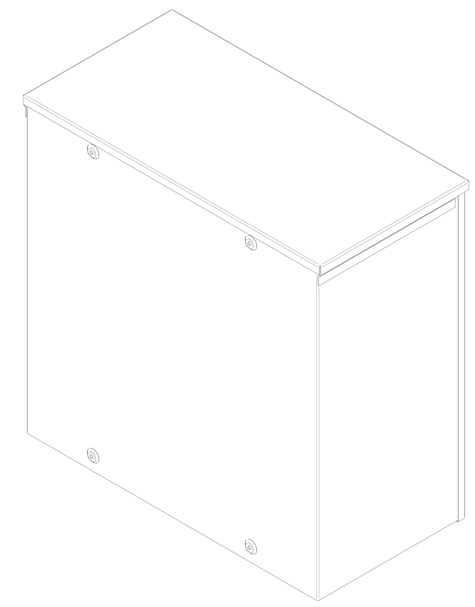

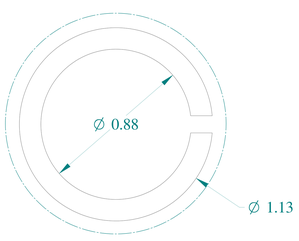


DETAIL Y
TYP

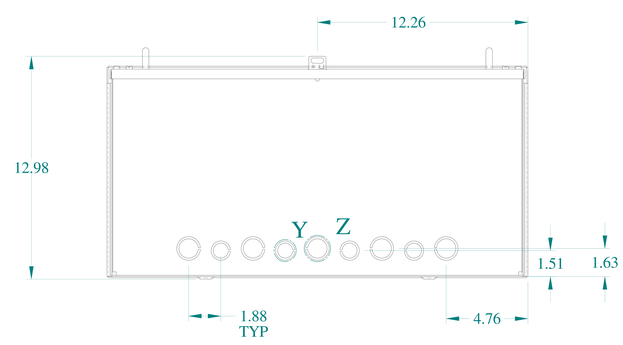


BOTTIOM VIEW

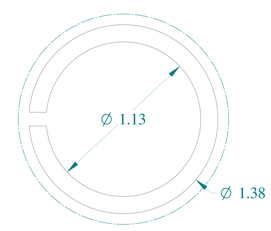


DETAIL Z
TYP

HAMMOND MANUFACTURING®

www.hammondmfg.com

Data subject to change without notice.

| | |
|---|---|
| Part # : C3R242412SC | Date : Mar. 23, 2019 |

Link:www.hammfg.com/C3R242412SC