THIS DRAWING IS UNPUBLISHED. RELEASED FOR PUBLICATION 20
© COPYRIGHT 20 BY - ALL RIGHTS RESERVED.

REVISIONS

P	LTR	DESCRIPTION	DATE	DWN	APVD
	1	NEW DRAWING	30JUN2016	VA	FWI
	A	PRODUCTION RELEASE AND DRAWING UPDATED	09MAY2017	AHM	FWI
	A1	NEW NOTE 5 AND NEW PN 2-2293269-3	23MAR2020	FRAN	SCH.

A-A

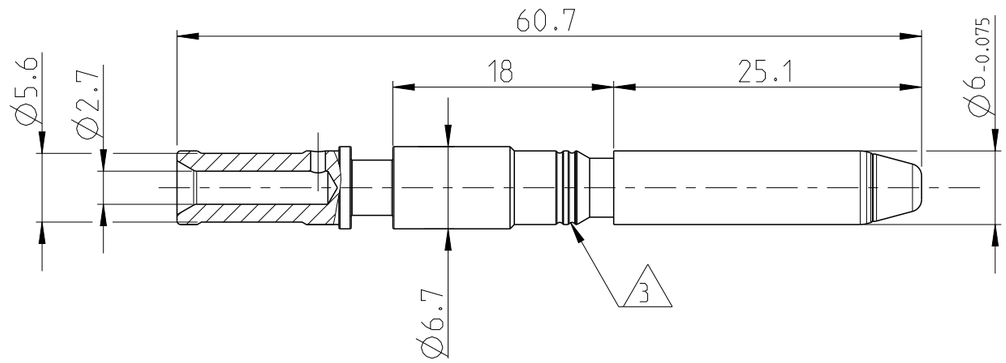

NOTES
Bemerkungen

1 IN CASE OF DISCREPANCIES BETWEEN GERMAN AND ENGLISH TEXT THE GERMAN TEXT IS BINDING
Im Falle von Unterschieden zwischen dem deutschen und dem englischen Text ist der deutsche Text verbindlich

2 HANDLING OF PARTS ONLY WITH GLOVES
Teile duerfen nur mit Handschuhen angefasst werden

3 CROSS SECTION MARKING:
NUMBER OF GROOVES ACC. NUMBER AFTER BASIS-PN
Kennzeichnung Leitungsquerschnitt:
Anzahl Einstiche gemaess Nachstrichzahl

4 BULK PACKAGING IN PLASTIC BAG IN FOLDING CARTON AND CORRUGATED SHIPPING BOX
Schuettgut in Beutel in Faltschachtel und Versandkarton

A1 5 PLATING MARKING: 6µm Ag
Kennzeichnung Beschichtung: 6µm Ag

AS SHOWN
2293269-2
2:1

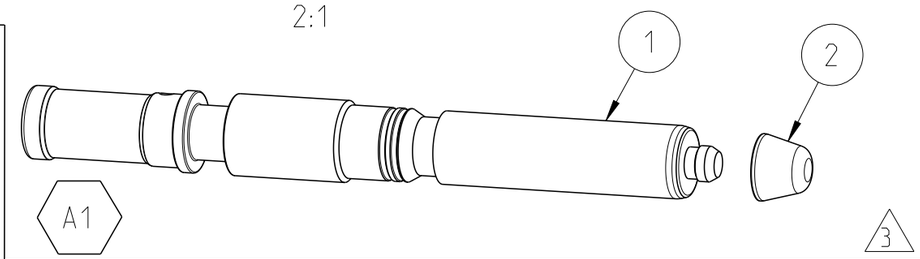

A1 AS SHOWN
2-2293269-3
A-A
2:1

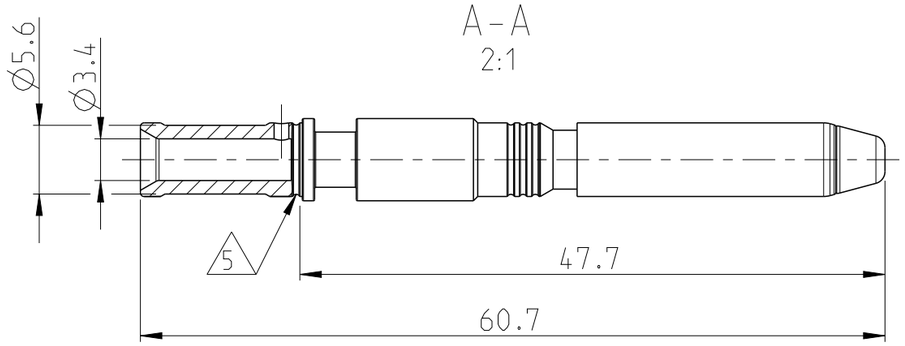

AS SHOWN
2293269-3
A-A

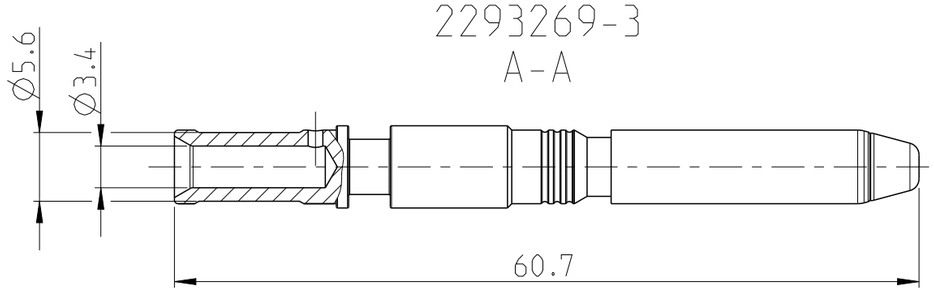

2-2293269-3	2293269-3	2293269-2	DESCRIPTION	GROOVES	ITEM NO	WEIGHT (g)	MATERIAL	SURFACE/ COLOR
1	1	1	FINGER PROTECTION CAP	-	2	0.06	PA66/6 FR	BLACK
1	-	-	PIN CONTACT DIA 6.0, 6mm², 6µm Ag	3	1	12.38	BRASS	SILVER
-	1	-	PIN CONTACT DIA 6.0, 6mm²					
-	-	1	PIN CONTACT DIA 6.0, 4mm²	2		12.75		
A	A	A	REVISION OF EACH ASSEMBLY					
QUANTITY PER ASSEMBLY			COMPONENT					

THIS DRAWING IS A CONTROLLED DOCUMENT.
DIMENSIONING AND TOLERANCING PER GPS (ISO STANDARDS).

DIMENSIONS: mm

TOLERANCES UNLESS OTHERWISE SPECIFIED: DIN ISO 2768-mK
0 PLC ±-
1 PLC ±-
2 PLC ±-
3 PLC ±-
4 PLC ±-
ANGLES ±-

MATERIAL - -
FINISH - -

DWN Vishwa A 30JUN2016
CHK F. Wittrock 30JUN2016
APVD F. Wittrock 30JUN2016
PRODUCT SPEC -
APPLICATION SPEC 114-94403
WEIGHT -

TE Connectivity

NAME PIN, DIA 6.0, L/N, ASSY
Rundkontakt 6mm, L/N, ZSB
-

SIZE A3 | CAGE CODE - | DRAWING NO C-2293269 | RESTRICTED TO -

CUSTOMER DRAWING | SCALE 5:1 | SHEET 1 OF 1 | REV A1

1470-19 (3/13)