THIS DRAWING IS UNPUBLISHED. RELEASED FOR PUBLICATION -
© COPYRIGHT copyright_date BY - ALL RIGHTS RESERVED.

REVISIONS					
P	LTR	DESCRIPTION	DATE	DWN	APVD
	1	NEW DRAWING	21JUN2016	AHM	FWI
	A	PRODUCTION RELEASE AND NOTES UPDATED	12MAY2017	AHM	FWI
	A1	NEW NOTE 5 AND NEW PN 2-2292542-4	23MAR2020	FRAN	SCH.

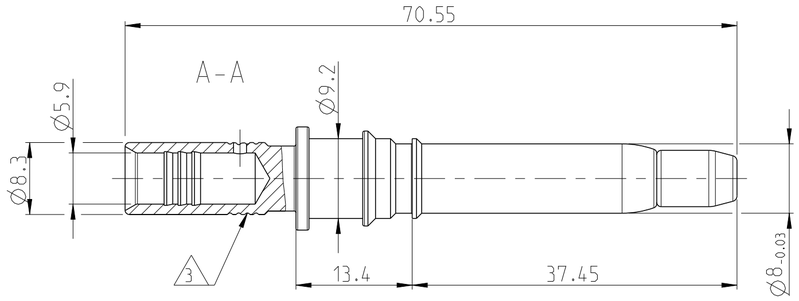

NOTES
Bemerkungen

1 IN CASE OF DISCREPANCIES BETWEEN GERMAN AND ENGLISH TEXT THE GERMAN TEXT IS BINDING
Im Falle von Unterschieden zwischen dem deutschen und dem englischen Text ist der deutsche Text verbindlich

2 HANDLING OF PARTS ONLY WITH GLOVES
Teile duerfen nur mit Handschuhen angefasst werden

3 CROSS SECTION MARKING:
NUMBER OF GROOVES ACC. NUMBER AFTER BASIS-PN
Kennzeichnung Leitungsquerschnitt:
Anzahl Einstiche gemaess Nachstrichzahl

4 TRAY PACKAGING IN CORRUGATED SHIPPING BOX
Tray-Verpackung im Versandkarton

A1 5 PLATING MARKING: 6µm Ag
Kennzeichnung Beschichtung: 6µm Ag

AS SHOWN
2292542-1
A-A

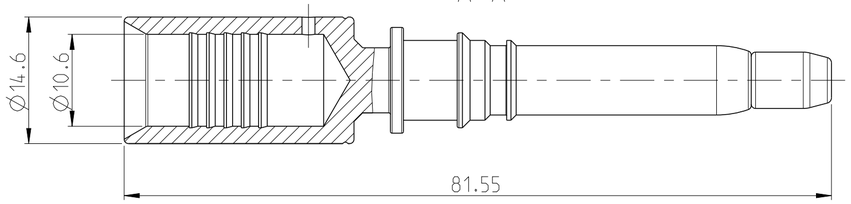

A1 AS SHOWN
2-2292542-4
A-A

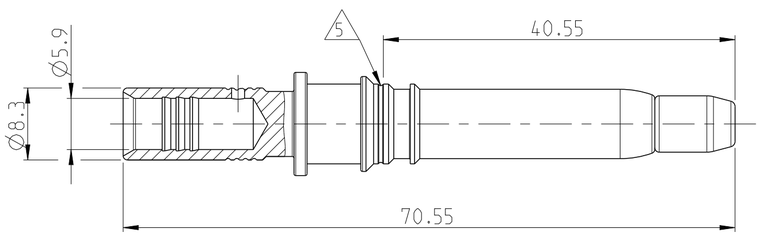

AS SHOWN
2292542-4

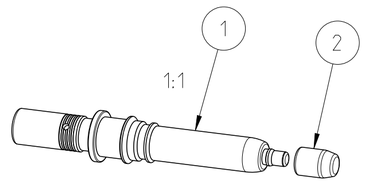

AS SHOWN
2292542-2
A-A

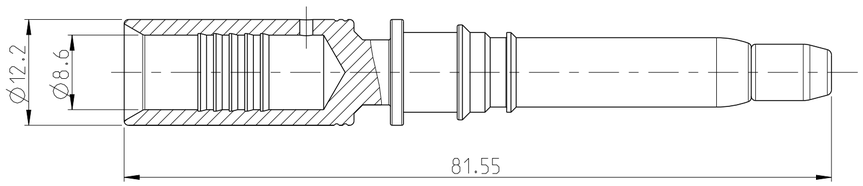

AS SHOWN
2292542-3
A-A

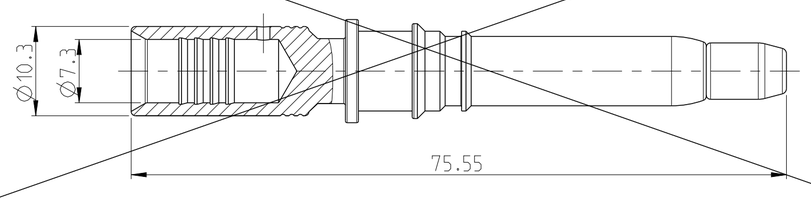

A1 3

2-2292542-4	2292542-4	2292542-3	2292542-2	2292542-1	DESCRIPTION	GROOVES	ITEM NO	WEIGHT (g)	MATERIAL	SURFACE/ COLOR
1	1	1	1	1	FINGER PROTECTION CAP	-	2	0.25	PA66/6 FR	BLACK
1	-	-	-	-	PIN CONTACT DIA 8.0, 16mm², 6µm Ag	4	1	26.10	BRASS	SILVER
-	1	-	-	-	PIN CONTACT DIA 8.0, 16mm²			25.27		
-	-	1	-	-	PIN CONTACT DIA 8.0, 25mm²	3	1	31.41	COPPER	
-	-		1	-	PIN CONTACT DIA 8.0, 35mm²	2	1	37.9		
-	-	-	-	1	PIN CONTACT DIA 8.0, 50mm²	1	1	43		
A	A	A	A	A	REVISION OF EACH ASSEMBLY					
QUANTITY PER ASSEMBLY					COMPONENT					

A1

THIS DRAWING IS A CONTROLLED DOCUMENT.
DIMENSIONING AND TOLERANCING PER GPS (ISO STANDARDS).

DIMENSIONS: mm

TOLERANCES UNLESS OTHERWISE SPECIFIED: DIN ISO 2768-mK
0 PLC ±
1 PLC ±
2 PLC ±
3 PLC ±
4 PLC ±
ANGLES ±

MATERIAL - -
FINISH - -

DWN Aravind H.M 21JUN2016
CHK Vishwa A 21JUN2016
APVD F. Wittrock 21JUN2016
PRODUCT SPEC -
APPLICATION SPEC 114-94403
WEIGHT -

TE Connectivity

NAME PIN, DIA 8.0, L/N, ASSY
-
-

SIZE	CAGE CODE	DRAWING NO	RESTRICTED TO
A2	-	C-2292542	-

CUSTOMER DRAWING | SCALE 5:1 | SHEET 1 OF 1 | REV A1

1471-9 (3/13)