Jan.1.2023 Copyright 2023 HIROSE ELECTRIC CO., LTD. All Rights Reserved.
In case of consideration for using Automotive equipment / device which demand high reliability, kindly contact our sales window correspondents.

	COUNT	DESCRIPTION OF REVISIONS	BY	CHKD	DATE		COUNT	DESCRIPTION OF REVISIONS	BY	CHKD	DATE
1	2	RE-C-03960	H.Z	M.S	04.12.1						. .
					. .						. .
					. .						. .

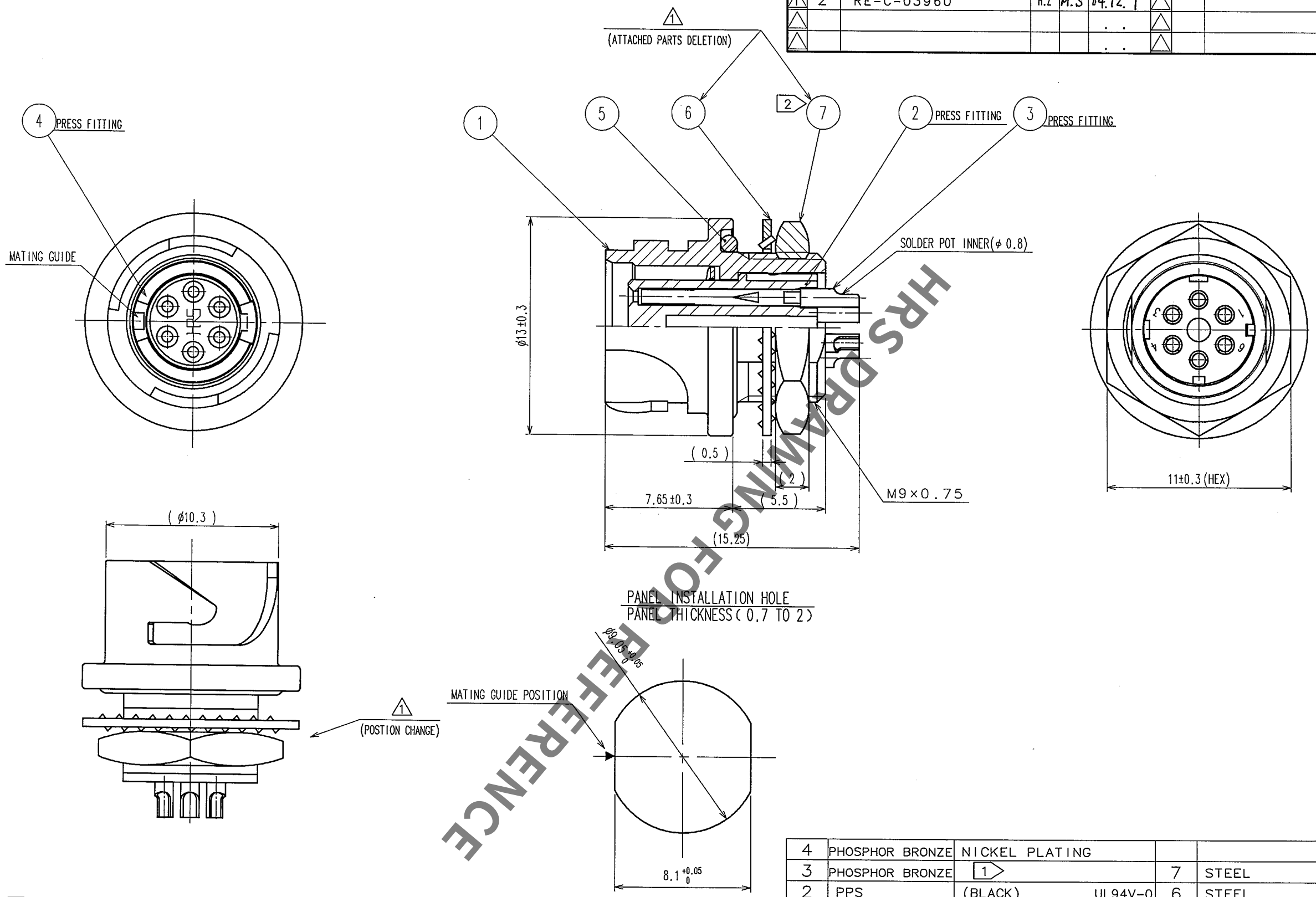

HRS DRAWING FOR REFERENCE

NOTES 1 PLATING(REF.NO. 3)
CONTACT AREA : GOLD 0.2μm min
OTHERS : GOLD AND NICKEL
UNDER PLATING : NICKEL 2μm min
2 THE RECOMMENDED CLAMP TORQUE OF REF.NO. 7 TO BE 1.5 TO 2N·m.
THREAD LOCKER TO THE THREADED PORTION OF REF.NO. 1 IS RECOMMENDED TO PREVENT REF.NO. 7 FROM LOOSING.
RECOMMENDED THREAD LOCKER:LOCTITE 271, HENKEL JAPAN LTD.
3 WHEN THIS CONNECTOR IS MOUNTED ON TO PANEL, BE CAREFUL REF.NO. 5 IS ASSEMBLED SURELY INTO THE GROOVE OF REF.NO. 1 AS SHOWN IN THIS FIGURE TO KEEP WATERPROOF EFFECTIVENESS.

NO.	MATERIAL	FINISH, REMARKS	NO.	MATERIAL	FINISH, REMARKS
4	PHOSPHOR BRONZE	NICKEL PLATING			
3	PHOSPHOR BRONZE	1	7	STEEL	NICKEL PLATING
2	PPS	(BLACK) UL94V-0	6	STEEL	NICKEL PLATING
1	ZINC ALLOY	NICKEL PLATING	5	CHLOROPRENE RUBBER	(BLACK)

CODE NO.(OLD)	DRAWN	DESIGNED	CHECKED	APPROVED	RELEASED
CL	H.Kawashima 04.05.24	H.Zemba 04.05.28	M.Sato 04.05.31	M.Yoshida 04.05.31	. .

SCALE 4 : 1
UNITS mm
DRAWING NO. EDC3-113851
HRS HIROSE ELECTRIC CO., LTD
PART NO. LF07WBR-6S
CODE NO. CL136-1002-0
1/1

TO
R

FORM NO.229