Feb.1.2023 Copyright 2023 HIROSE ELECTRIC CO., LTD. All Rights Reserved.
In case of consideration for using Automotive equipment / device which demand high reliability, kindly contact our sales window correspondents.

	COUNT	DESCRIPTION OF REVISIONS	BY	CHKD	DATE		COUNT	DESCRIPTION OF REVISIONS	BY	CHKD	DATE
1	1	DIS-C-000585	T.K	E.K	07.07.27						. .
					. .						. .
					. .						. .

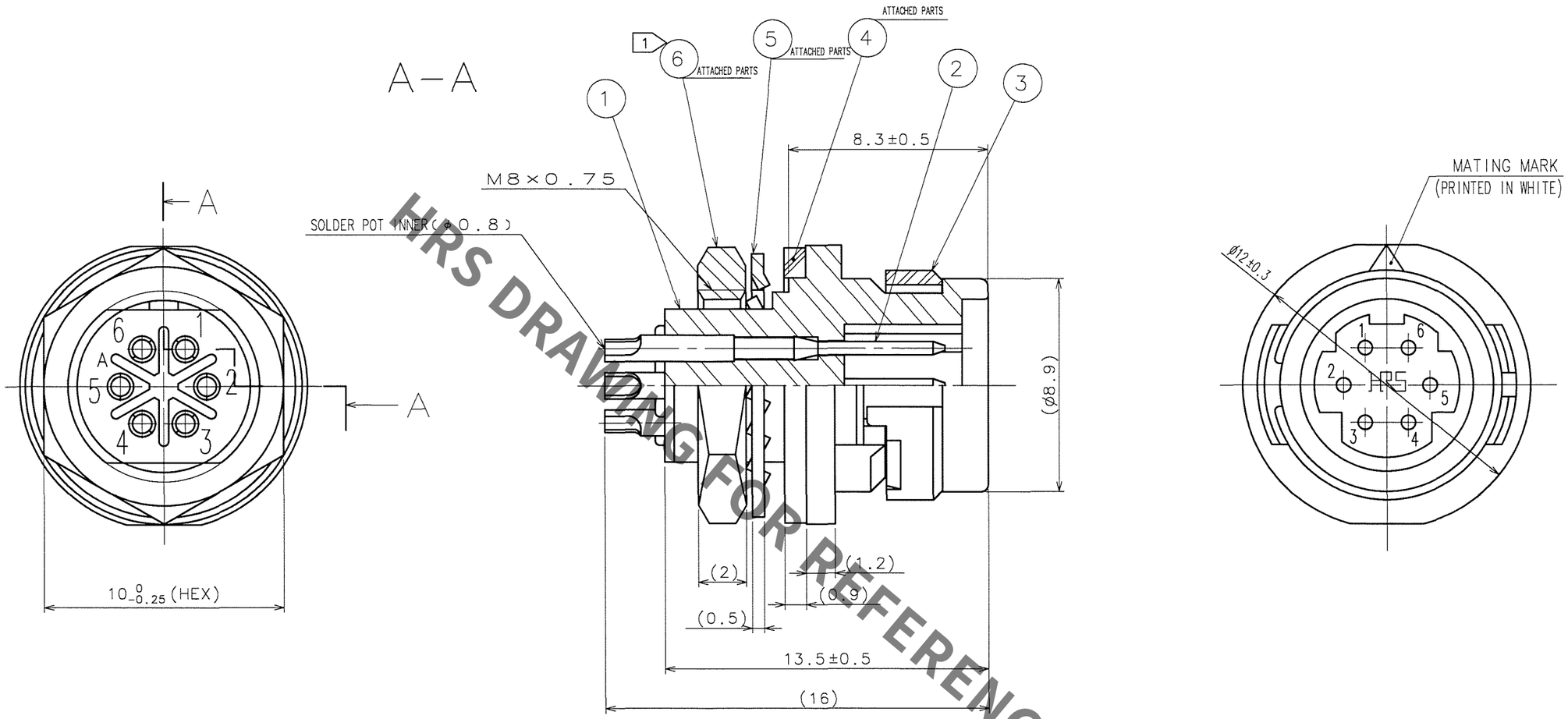

HRS DRAWING FOR REFERENCE

NOTES 1 THE RECOMMENDED CLUMP TORQUE OF REF. NO.⑥ TO BE 0.5N・m.
LOCTITE 271, LOCPRIMER 7649, LOCTITE JAPAN IS RECOMMENDED TO PREVENT REF. NO.⑥ FROM LOOSENING.
2 TABLE FOR SOLDERING IS AVAILABLE HR30-6R-6P-T01.
3 SURFACE PLATING: GOLD PLATING 0.2μm min.
UNDER PLATING: NICKEL PLATING 2μm min.

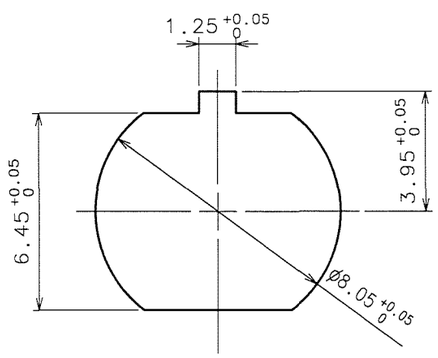

PANEL INSTALLATION HOLE
PANEL THICKNESS(0.7~2)

NO.	MATERIAL	FINISH, REMARKS	NO.	MATERIAL	FINISH, REMARKS
3	PPS	(BLACK)	6	BRASS 1	NICKEL PLATING
2	BRASS	3	5	PHOSPHOR BRONZE	NICKEL PLATING
1	PPS	(BLACK) UL94V-0	4	CR	(BLACK)

CODE NO.(OLD)	DRAWN	DESIGNED	CHECKED	APPROVED	RELEASED
	M.HANYU '05 8 8	H.NAGANO '05 8 8	E.KUNII '05 8 10	M.SATO '05 8 10	. .

SCALE 5 : 1
UNITS mm

DRAWING NO. EDC3-112023-71

HRS HIROSE ELECTRIC CO., LTD

PART NO. HR30-6R-6P(71)

CODE NO. CL130-1009-0-71

1/1

TO
R