DRAWING FOR REFERENCE: This is subject to change without notice
08/11/2012

HRS DRAWING FOR REFERENCE

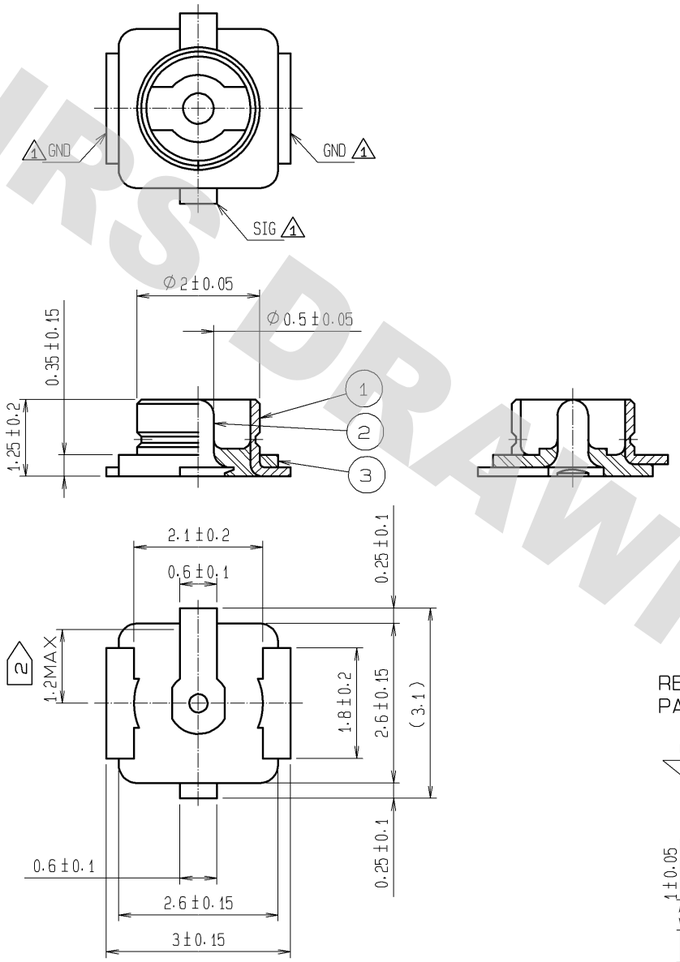

ENBOSSED TAPING DRAWING(4:1)

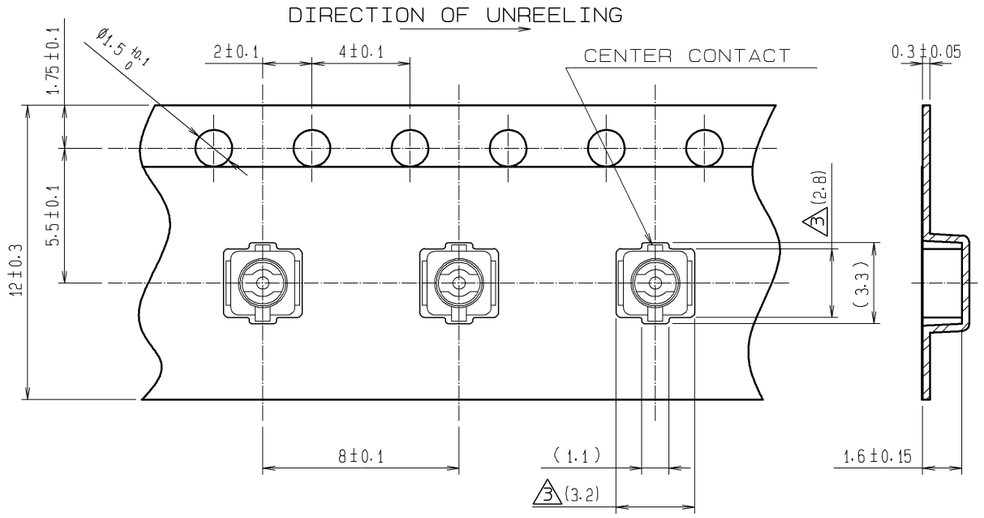

RECOMMENDED PC BOARD PATTERN DRAWING(5:1)

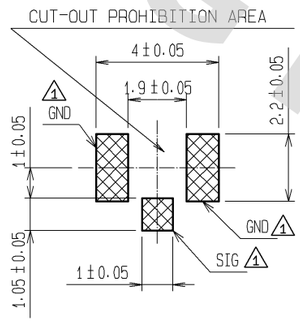

1 2 MOUNTING TEMPERATURE PROFILE (REFERENCE)

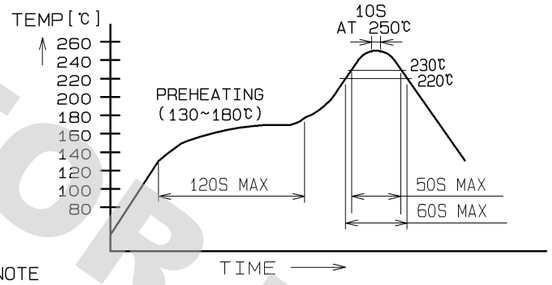

NOTE
MOUNTING TEMPERATURE PROFILE VARIES ACC ORDING TO BOARD SIZE, SOLDER TYPE APPLIED AND S OLDER THICKNESS.

·METAL MASK THICKNESS: 0.1mm / 0.12mm

·Up to 2cycles of Reflow.

REEL DRAWING(SCALE FREE)

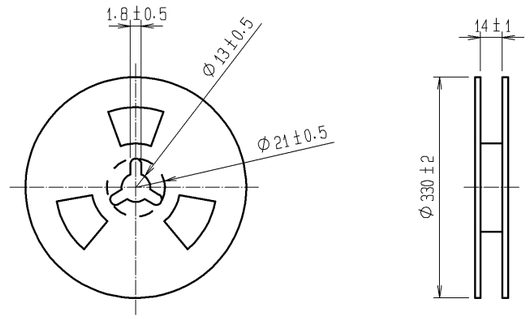

NOTES:

1: THE QUANTITY OF U.FL-R-SMT(10) IS 2500 CONNECTORS PER REEL.

2: THIS DIMENSION SHOWS THE ALLOWABLE RANGE THAT THE RESIN IS PUT OVER THE CENTER CONTACT.

3: LEAD CO-PLANARITY SHALL BE 0.1MAX.

4: FOR THE POSSIBILITY OF BREAKAGE OR DEFORMATION, DO NOT MATE THIS CONNECTOR WITH PARTNER, U.FL-LP-*** BEFORE MOUNTING ON PC BOARD.

2 5: USE ALL PRODUCTS WITHIN 6 MONTHS AFTER THE DELIVERY. STORE THEM IN MANUFACTURER'S PACKAGE OR TIGHTLY RE-CLOSED BOX WITH THE FOLLOWING CONDITIONS. CHECK THE TERMINAL SOLDERABILITY BEFORE USE IF THE PRODUCT HAS BEEN STORED FOR MORE THAN 6 MONTHS.

TEPERATURE: -10℃ TO +40℃
HUMIDITY : 15 TO 85% RH.

2 6: ENVIRONMENTAL CONDITIONS
DO NOT USE THE PRODUCTS UNDER THE ENVIRONMENTAL CONDITIONS AS SHOWN BELOW DUE TO POSSIBLE PRODUCT DETERIORATION.

SPECIAL GAS ATMOSPHERE(HYDROGEN SULFIDE GAS, SULFUR SULFIDE GAS AND HYDROGEN CHLORIDE GAS)
PLACE ATTENTION REQUIRED: HEATING SYSTEM, AREA NEAR HOT SPRING, VOLCANIC MOUNTAIN AND ALIKE.

WATER SPLACHED AND CONDENSATION PLACES.
PLACE ATTENTION REQUIRED: HARSH TEMPERATURE CHANGE.

NO.	MATERIAL	FINISH, REMARKS	NO.	MATERIAL	FINISH, REMARKS
2	BRASS	GOLD PLATING			
1	PHOSPHOR BRONZE	SILVER PLATING	3	LCP	(BEIGE), UL94V-0

UNITS	SCALE		COUNT	DESCRIPTION OF REVISIONS	DESIGNED	CHECKED	DATE
mm	10:1	3	2	DIS-D-002045	MT. KANEKO	NK. NINOMIYA	10.12.10

HRS HIROSE ELECTRIC CO., LTD.

APPROVED	: IJ. MITANI	05.01.05	DRAWING NO.	EDC3-131821-10
CHECKED	: MH. YAMANE	05.01.05	PART NO.	U.FL-R-SMT(10)
DESIGNED	: NK. NINOMIYA	05.01.05	CODE NO.	CL331-0471-0-10
DRAWN	: MA. SAEKI	05.01.05	3	1/1