REVISIONS					
REV	ECO	DESCRIPTION	DATE	BY	APPR
A1	--	RELEASE NEW DRAWING	16/NOV/22	MILO	TOMMY

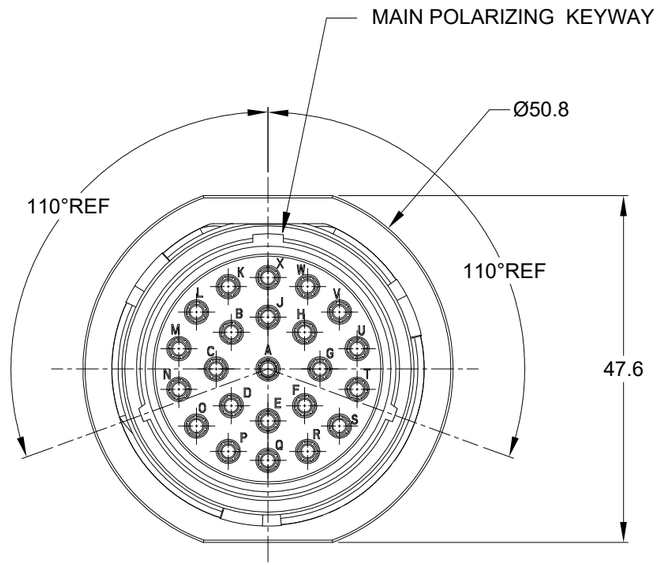

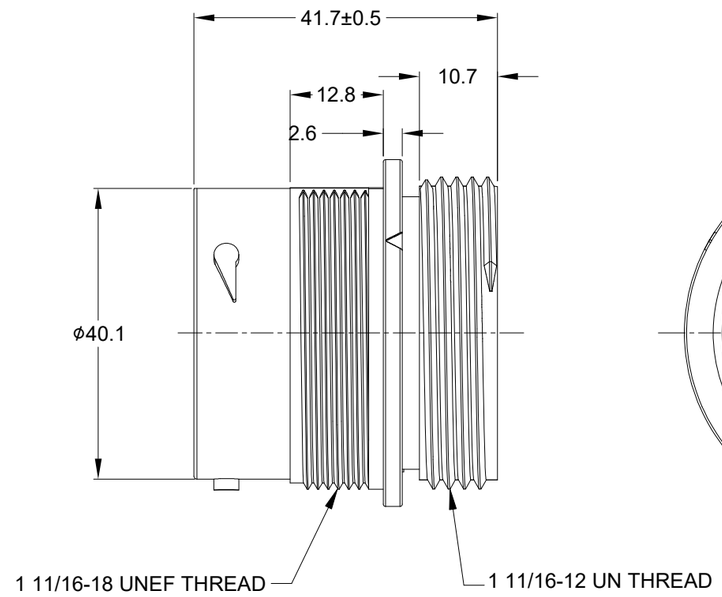

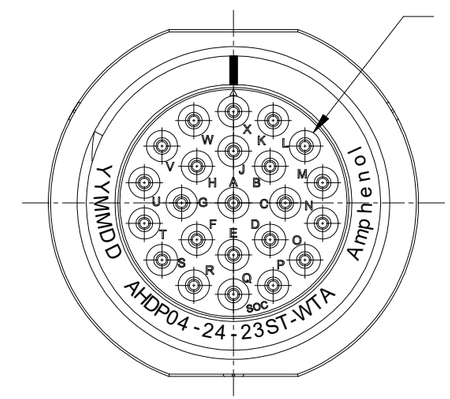

NOTES: UNLESS OTHERWISE SPECIFIED

1. MATERIAL:
   HOUSING: THERMOPLASTIC; BLACK
   SEAL: SILICONE RUBBER

2. MODIFICATIONS: WIDE THREAD ADAPTER (WTA);
   THIN WALL DIA. WIRE SEAL

3. SPECIFICATIONS:
   3.1 OPERATING TEMPERATURE: -55°C TO +125°C.
   3.2 DIELECTRIC WITHSTANDING VOLTAGE: LESS THAN 2 MILLIAMPS CURRENT LEAKAGE @ 1500 VOLTS AC.
   3.3 INSULATION RESISTANCE: 1000 MEGOHM MIN @ 25°C.
   3.4 MOISTURE RESISTANCE:
   IP68(IM OF WATER FOR A PERIOD OF 24 HOURS, MATED CONDITION);
   IP69K(MATED CONDITION)
   3.5 MATING CYCLE DURABILITY: 100 CYCLES
   3.6 RoHS COMPLIANT

4. MATING PART: AHDP06-24-23P* (* = SEAL TYPE)

5. ALL DIMENSIONS ARE FOR REFERENCE USE ONLY.

6 CONTACT SIZE AND WIRE RANGE:

CONTACT SIZE	MIN.INSUL O.D	MAX.INSUL O.D	WIRE RANGE mm²
16	2.23mm (.088in)	2.69mm (.106in)	14-20AWG (2.0-0.5mm²)

7. RECEPTACLE IS SUPPLIED WITH DUST CAP (NOT SHOWN).

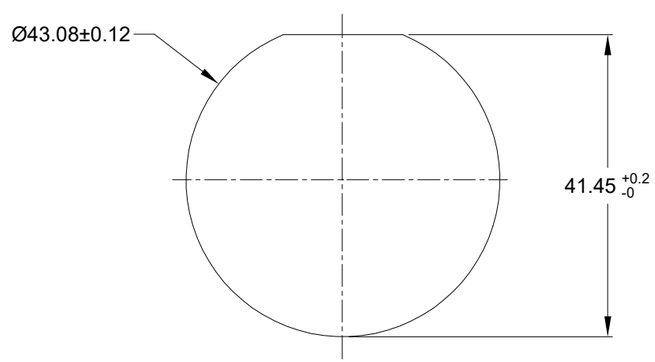

RECOMMENDED PANEL MOUNTING HOLE

RECOMMENDED PANEL THICKNESS:1.6 TO 4.7MM

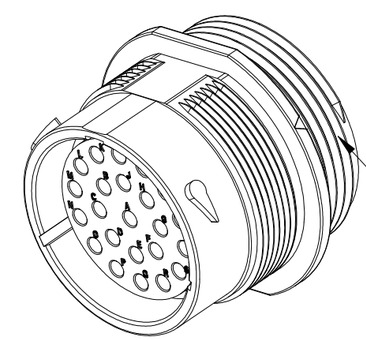

QUANTITY	PART NUMBER	DESCRIPTION	ITEM
	AHDP04-24-23ST-WTA		

MATERIALS LIST

UNLESS OTHERWISE SPECIFIED
1) All dimensions are in metric(mm).
2) Tolerances are as follows:
1 PL DEC ±0.30 | Fractions ±1/64
2 PL DEC ±0.15 | Angles ±1°
3 PL DEC ±0.08
3) Note reference = x

MATERIAL SPECIFICATIONS:
WEIGHT: 57.6g

PROCESS SPECIFICATIONS:

NEXT ASS'Y:

SIGNATURES		DATE
DRAWN:	MILO.DONG	16/NOV/22
CHECKED:	SULLEN.ZHANG	17/NOV/22
ENGINEER:		
APPROVAL:	TOMMY.XIE	18/NOV/22
CUSTOMER:		

THIS DRAWING IS SUPPLIED FOR INFORMATION ONLY. DESIGN FEATURES, SPECIFICATIONS AND PERFORMANCE DATA SHOWN HEREON ARE THE PROPERTY OF THE AMPHENOL CORPORATION. NO RIGHTS OF REPRODUCTION ARE IMPLIED. ALL DIMENSIONS ARE SUBJECT TO NORMAL MANUFACTURING VARIATIONS.

Amphenol
Sine Systems - www.amphenol-sine.com
44724 Morley Drive
Clinton Township, MI 48036

23POS,RECEPTACLE,SOCKET,24SZ,
THIN WIRE SEAL,WTA,AHDP

SIZE	TYPE	DWG NO:	REVISION
B	C-	AHDP04-24-23ST-WTA	A1

SCALE: NONE | DURAMATE | SHEET 1 OF 1

TITLE: 23POS,RECEPTACLE,SOCKET,24SZ,THIN WIRE SEAL,WTA,AHDP
DWG NO: AHDP04-24-23ST-WTA
REV: A1
SH: 1
OF: 1