RSN116890

HARDWARE INCLUDED			
ITEM NO.	PART NO.	DESCRIPTION	QTY.
1	200003101	PAN HEAD SCREW, PHILIPS, 4–40, NAS600–6P	3
2	200003401	SPLIT LOCKWASHER, #4, MS21042–3	3
3	200007501	SCREW + WASHER ASSEMBLY PER MS25332–1	3
4	200002501	HEX NUT, SELF LOCKING, 10–32, MS21042	3

REV	ECN	APP'D
M	5523	JT 9/27/04

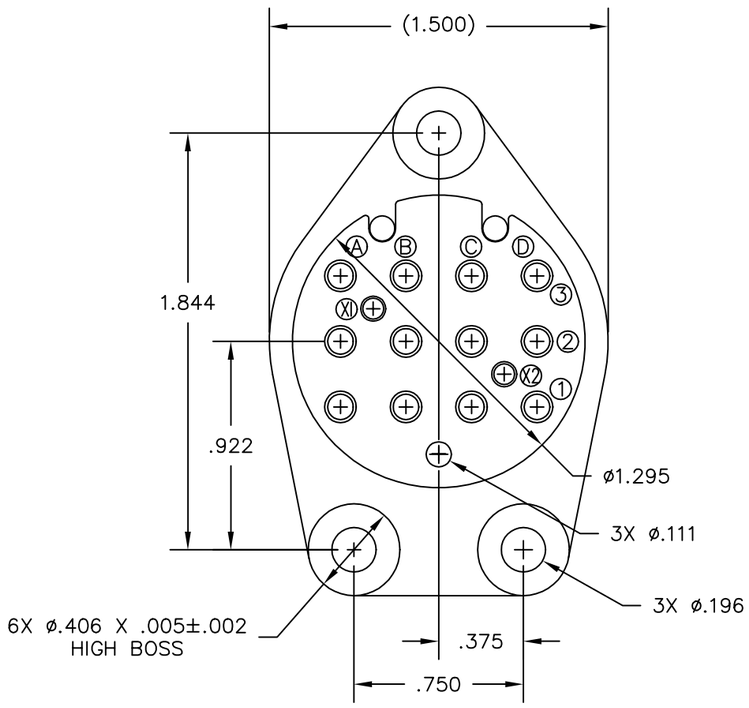

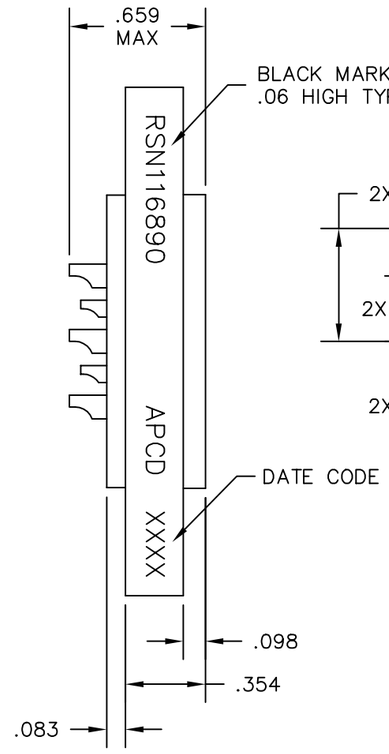

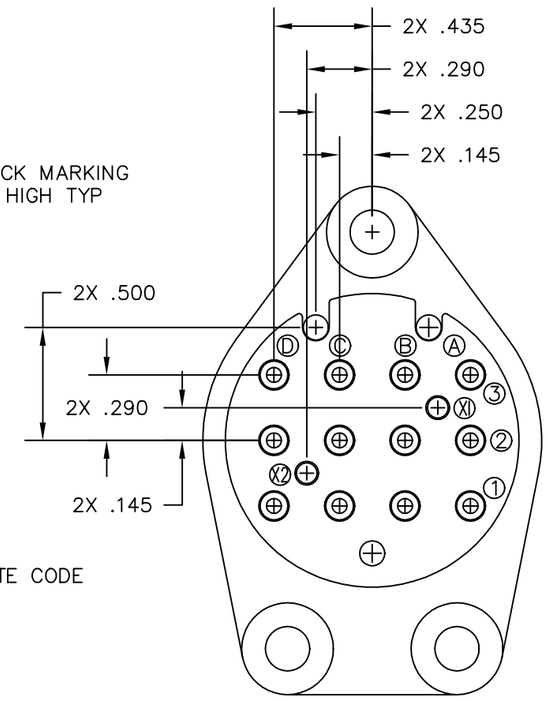

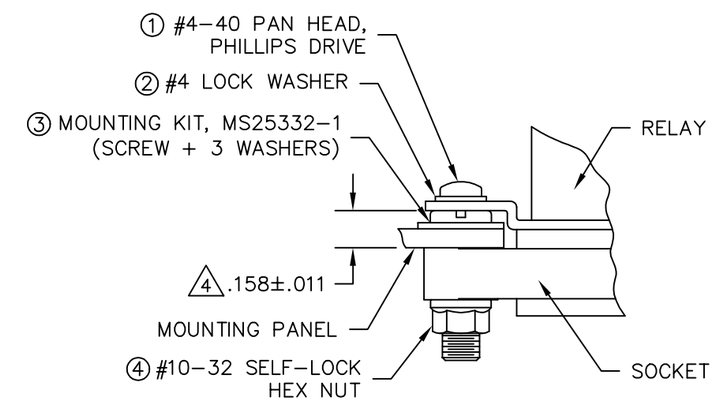

MOUNTING HARDWARE
TYPICAL 3X

NOTES:
1. PART MEETS APPLICABLE REQUIREMENTS OF MILITARY STANDARD MS25328.
2. MATERIAL:
   HOUSING – POLYETHERIMIDE, COLOR: BLUE–GREEN.
   SOCKET CONTACTS – COPPER ALLOY, GOLD PLATED.
3. FOR USE WITH MS25027, OR LEACH CORP. 9224 SERIES, RELAY, 4 POLE, 10 AMP.
4. DIMENSION ACHIEVED BY VARYING THE NUMBER OF WASHERS USED FOR MOUNTING.
5. HARDWARE SUPPPLIED PER TABLE.

DIMENSIONS	TOLERANCES	PROJECTION	Amphenol Pcd	TITLE
ANSI Y14.5M UNITS: INCHES ACAD FILE	.XX ±.01 .XXX ±.005 ANGLES ±2°		SPECIFICATION DRAWING ENGR S. KONDO 9/27/04	RELAY SOCKET, 4–POLE, NON–ENVIRONMENTAL, SOLDER TERMINATION
ORIGINAL	THIS DOCUMENT CONTAINS PROPRIETARY INFORMATION WHICH IS THE CONFIDENTIAL PROPERTY OF AMPHENOL PCD INC. PEABODY, MA		CHKD R. NEWMAN 9/27/04 APPD J. TON 9/27/04	SIZE B · DWG NO. RSN116890 · REV M CODE: 58982 · SCALE: 3:2 · SHEET 1 OF 1

RSN116890

RSN116890