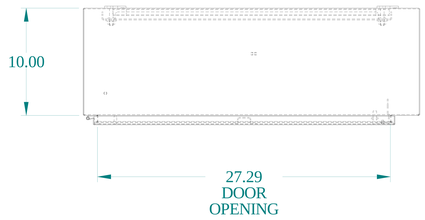


TOP VIEW

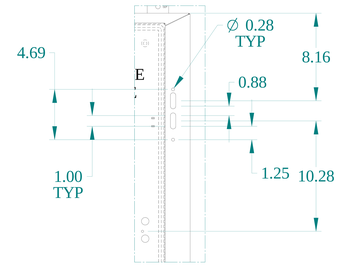


DETAIL" Z"

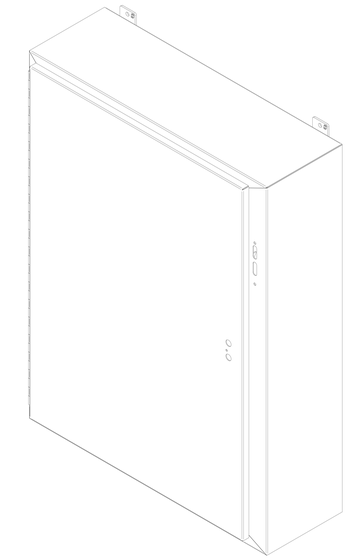

ISOMETRIC VIEWS

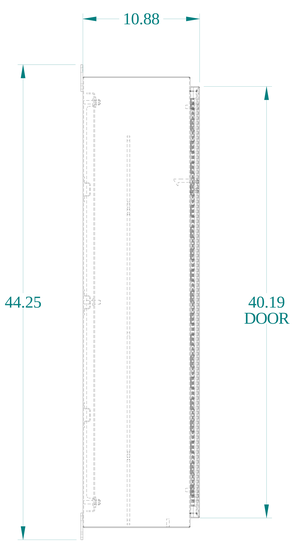


SIDE VIEW

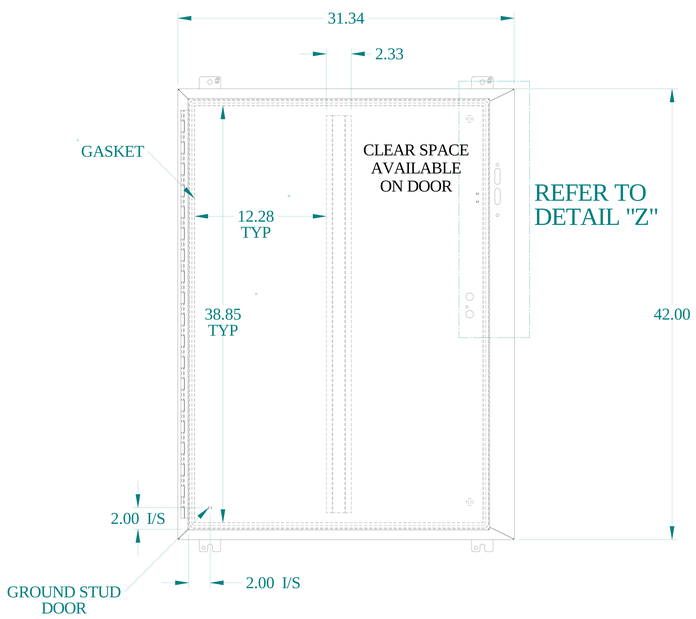


FRONT VIEW

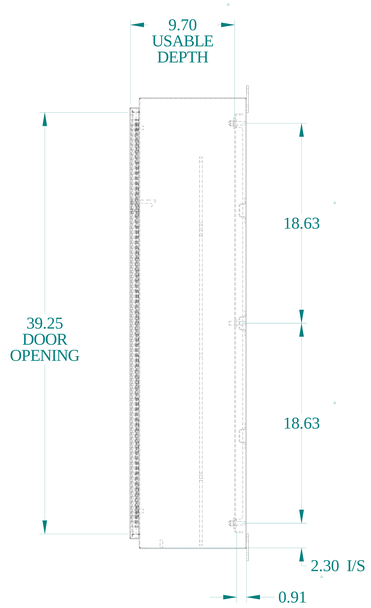


SIDE VIEW

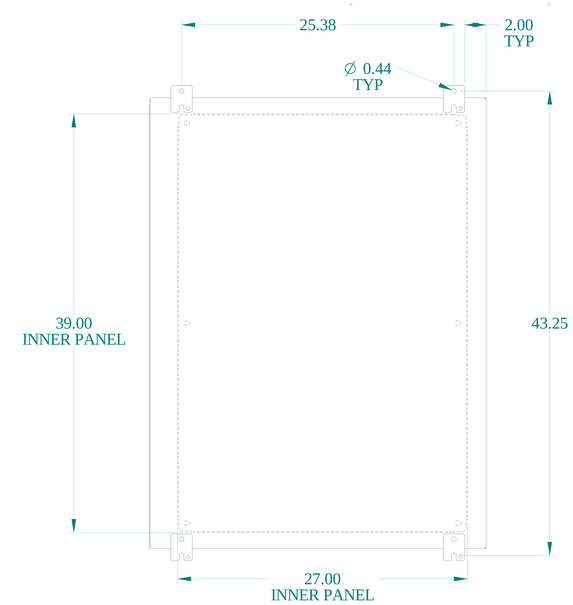


BACK VIEW

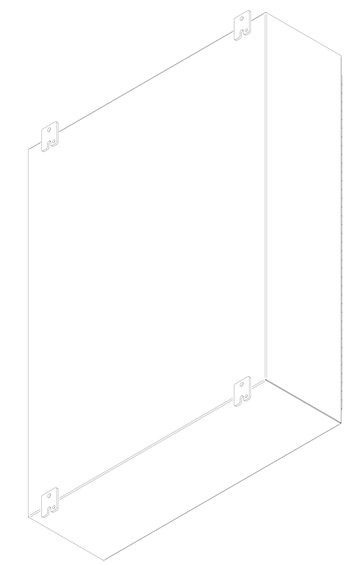

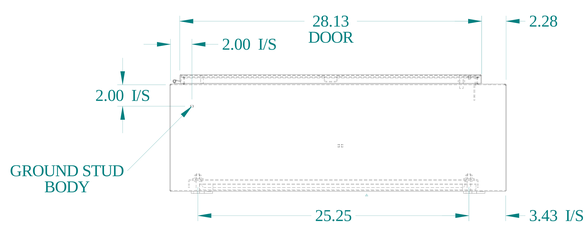


BOTTOM VIEW

HAMMOND MANUFACTURING®

www.hammondmfg.com

Data subject to change without notice.

| | |
|---|---|
| Part # : 1447SH10 | Date : Dec. 6, 2021 |

Link:www.hammfg.com/1447SH10