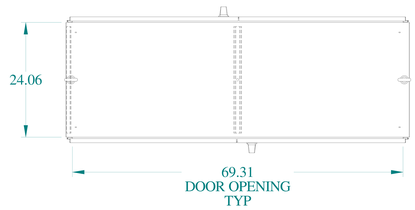

TOP VIEW

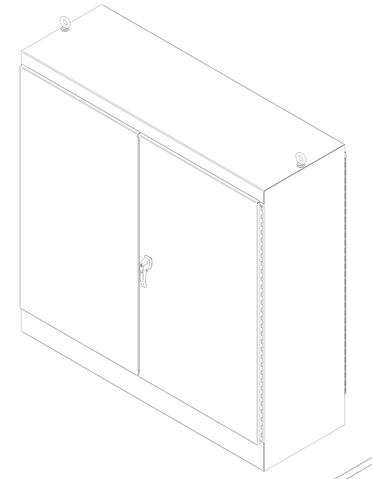

ISOMETRIC VIEWS

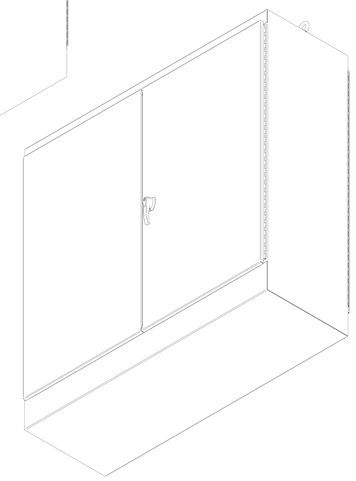

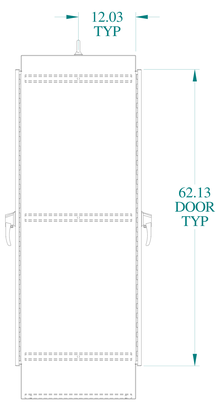

SIDE DOOR

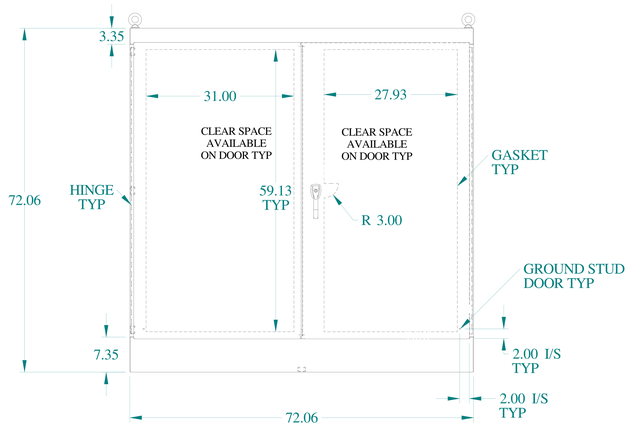

FRONT VIEW

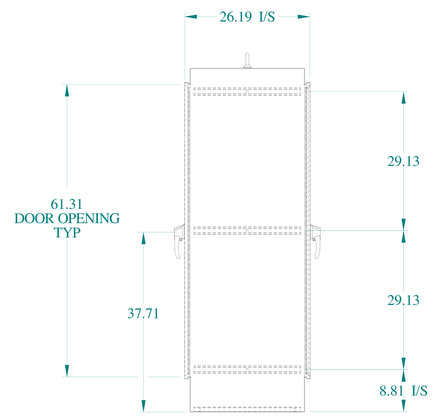

SIDE DOOR

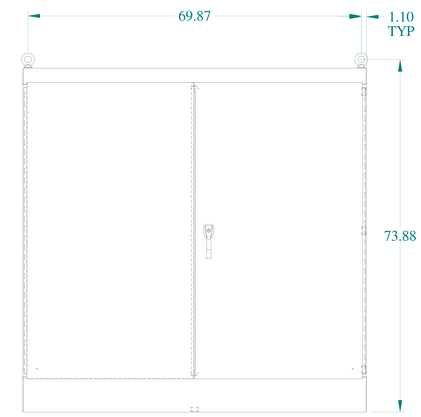

BACK VIEW

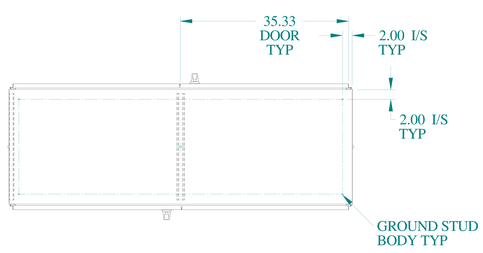

BOTTOM VIEW

HAMMOND MANUFACTURING®

www.hammondmfg.com

Data subject to change without notice.

Part # : 1418ZYD24	Date : Apr. 1, 2019

Link:www.hammfg.com/1418ZYD24