TABLE OF CONTENTS	
SHEET NO.	SHEET DESCRIPTION
1	NOTES AND BOM
2	CONFIGURATIONS
3	ADAPTOR DETAIL

BILL OF MATERIALS (BOM)

DESCRIPTION	PART NUMBER	CIRCUIT SIZE	COLOR	RIBS	MATING DRAWING	CONVOLUTE SIZE	STATUS
1X3 C.S., WITH RIB	204351-0304	1X3 C.S.	BLACK	YES	2043510301 PSD	AD 10 SOFANOU VARIANT 1	SALEABLE
2X4, WITH RIB	34951-0831	2X4	BLACK	YES	SD-34951-0001 SD-34950-0001	NW 12 SCHLEMMER	SALEABLE
2X4, WITHOUT RIB	34951-0841	2X4	BLACK	NO	SD-34951-0001 SD-34950-0001	NW 12 SCHLEMMER	SALEABLE
2X8/2X10, WITH RIB	34951-1631	2X8/2X10	BLACK	YES	SD-34951-0001 SD-34950-0001	NW 16 SCHLEMMER	SALEABLE
2X8/2X10, WITHOUT RIB	34951-1641	2X8/2X10	BLACK	NO	SD-34951-0001 SD-34950-0001	NW 16 SCHLEMMER	SALEABLE

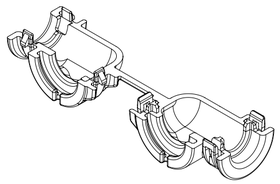

1X3 C.S.

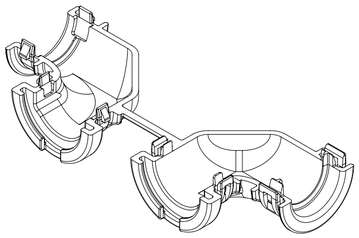

2X4

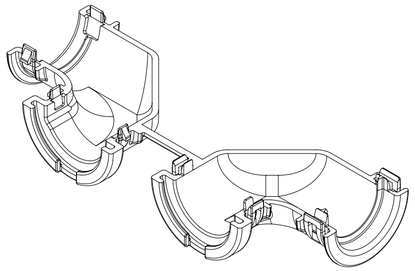

2X8/2X10

ADAPTOR NOTES: VALID UNLESS OTHERWISE SPECIFIED

1. GENERAL:
a. APPLICATION SPECIFICATION SEE: 1600730001-AS REV C
-DESIGNED TO MATE WITH BACKSHELL AS SPECIFIED IN THE BOM
-COMPONENTS ARE OPTIONAL AND MUST BE PURCHASED SEPERATELY. SEE GM DRAWING 13109960 REV 006 FOR CONDUIT SPECIFICATIONS
b. PRODUCT SPECIFICATION: TBD
c. PACKAGING SPECIFICATION SEE: TBD
d. PARTS MUST BE IN COMPLIANCE TO MOLEX CHEMICAL SUBSTANCES FOR PRODUCTS AND PACKAGING SPECIFICATION: QEHS-699000-300
e. DATA MUST BE SUBMITTED UNDER THE MOLEX PART NUMBER TO IMDS (COMPANY ID#13255)
f. FOLLOWING PRODUCTION CODES TO BE PRESENT
-DATE CODE
-MOLD CAVITY CODE
-MOLEX LOGO
-RECYCLE CODE
2. DESIGN - MATERIALS:
a. PA66 0% GLASS FILLED
b. BLACK

3. DESIGN GEOMETRY:
a. THIS IS A 100% CAD GENERATED PART. THE CAD MATHEMATICAL DATA IS THE MASTER FOR THIS PART. FOR DIMENSIONAL OR ANY INFORMATION NOT SHOWN ON THIS DRAWING, ANALYZE THE CAD MODEL.
b. GEOMETRIC DIMENSIONS AND TOLERANCES PER ASME Y14.5M - 2009.
c. CORNERS SHOWN AS SHARP TO BE R 0.1.
d. VISUAL DEFECTS SHALL MEET COSMETIC STANDARD PS-45499-002 (CLASS B).
e. VISUAL DEFECTS SHALL MEET COSMETIC STANDARD PS-45499-002 (CLASS C) FOR SPECIFIED AREAS ON THE ADAPTOR.
f. ALLOWABLE FLASH, PARTING LINES MISMATCH, EJECTOR PINS MARK, AND GATE VESTIGE TO BE +0.30 MAX PROTUSION.

REV	DESCRIPTION
A10	CHANGED TOLERANCE ON DIM C FROM 0.12 TO 0.10 TO MATCH PDD
A9	CHANGED PARTS STATUS TO SALEABLE
A8	UPDATED RIB FEATURES AND CONTROLS
A7	UPDATE TOLERANCES FOR MANUFACTURING
A6	UPDATE TOLERANCES FOR MANUFACTURING
A5	UPDATE REV DESCRIPTION TABLE
A4	UPDATE NOTE 1.a FOR CONDUIT DEFINITION
A3	RELEASE P/N 204351-0304 FOR SALEABLE
A2	UPDATED CHARTS AND BALLOON NUMBERS
A1	MODIFIED SETTING IN PLM
A	DRAWING RELEASE

INSPECTION NUMBER LOG

LAST NUMBER: 53
ADDED: 41,51,43,53,45,48,27,28,14,25,17,19,15,27
REMOVED: 1,2,3,4,5,43,53

THIS DRAWING CONTAINS INFORMATION THAT IS PROPRIETARY TO MOLEX ELECTRONIC TECHNOLOGIES, LLC AND SHOULD NOT BE USED WITHOUT WRITTEN PERMISSION

EC NO: 632862 2020/02/25
DRWN: PPALLAN 2020/02/26
CHK'D: MVANSLAMBROU 2020/02/26
APPR: MVANSLAMBROU

GENERAL TOLERANCES (UNLESS SPECIFIED)

ANGULAR TOL ±		°
4 PLACES	±	
3 PLACES	±	
2 PLACES	±	0.1
1 PLACE	±	0.2
0 PLACES	±	

DRAFT WHERE APPLICABLE MUST REMAIN WITHIN DIMENSIONS

REV: A10

DIMENSION UNITS: mm
SCALE: 1:1
DRWN BY: DDEB DATE: 2017/12/08
CHK'D BY: DATE:
APPR BY: MVANSLAMBROU DATE: 2017/12/20
DRAWING SIZE: A2
THIRD ANGLE PROJECTION

molex®

MX150 90° ADAPTOR

PRODUCT CUSTOMER DRAWING

SERIES: 34951
MATERIAL NUMBER:
CUSTOMER:
DOCUMENT NUMBER: 349510001
DOC TYPE: PSD
DOC PART: 000
SHEET NUMBER: 1 OF 4

RELEASE STATUS	P1	RELEASE DATE	2020/02/26 00:51:12

FORMAT: master-tb-prod-A2
REVISION: G
DATE: 2017/02/06

SHEET DESCRIPTION
CONFIGURATIONS

WITH RIB

WITHOUT RIB

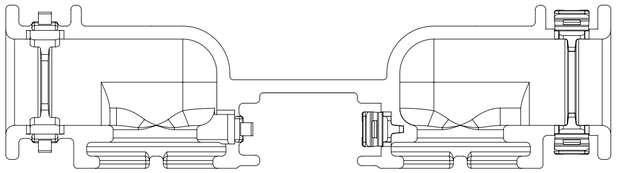

1X3 C.S.

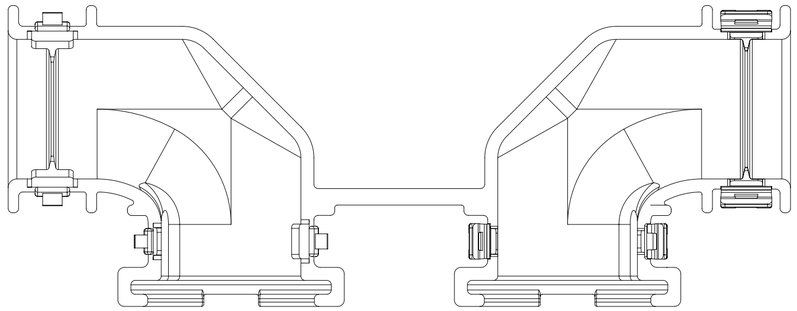

2X4

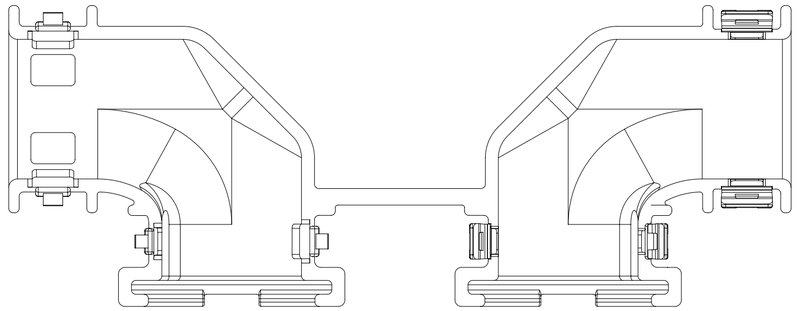

2X4

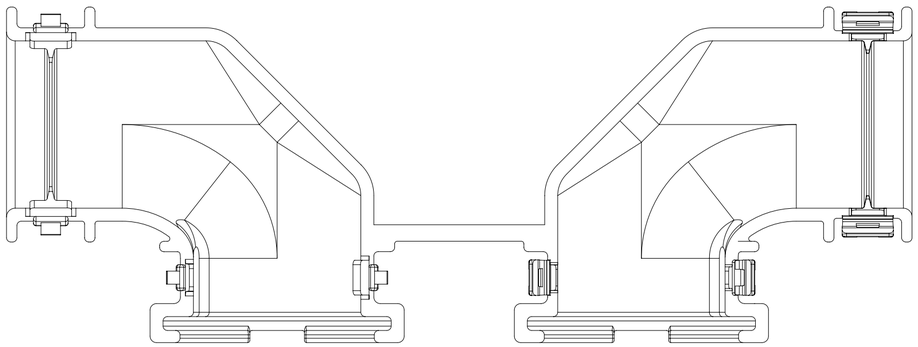

2X8 / 2X10

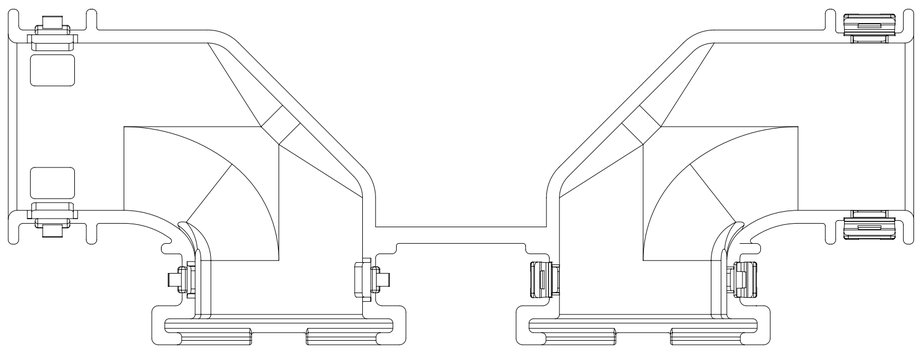

2X8 / 2X10

THIS DRAWING CONTAINS INFORMATION THAT IS PROPRIETARY TO MOLEX ELECTRONIC TECHNOLOGIES, LLC AND SHOULD NOT BE USED WITHOUT WRITTEN PERMISSION

EC NO: 632862	DRWN: PPALLAN	2020/02/25
CHK'D: MVANSLAMBROU	APPR: MVANSLAMBROU	2020/02/26
		2020/02/26

GENERAL TOLERANCES (UNLESS SPECIFIED)

ANGULAR TOL ±		°
4 PLACES	±	
3 PLACES	±	
2 PLACES	±	0.1
1 PLACE	±	0.2
0 PLACES	±	

DRAFT WHERE APPLICABLE MUST REMAIN WITHIN DIMENSIONS

A10 REV

DIMENSION UNITS	mm
SCALE	2:1
DRWN BY	DDEB
DATE	2017/12/08
CHK'D BY	
DATE	
APPR BY	MVANSLAMBROU
DATE	2017/12/20
DRAWING SIZE	A2
THIRD ANGLE PROJECTION	

molex®

MX150 90° ADAPTOR

PRODUCT CUSTOMER DRAWING

SERIES	MATERIAL NUMBER	CUSTOMER
34951		

DOCUMENT NUMBER	DOC TYPE	DOC PART	SHEET NUMBER
349510001	PSD	000	2 OF 4

RELEASE STATUS	P1	RELEASE DATE	2020/02/26 00:51:12

FORMAT: master-tb-prod-A2
REVISION: G
DATE: 2017/02/06

SHEET DESCRIPTION
DUAL ROW ADAPTOR DETAIL

CHARTED DIMENSION					
DESCRIPTION	DIMENSIONS				
	P	R	C	D	E
2X4 WITH RIB	1.35	16.10	0.80	N/A	N/A
2X4 W/O RIB	N/A	16.10	N/A	3.60	5.10
2X8/2X10 WITH RIB	1.45	19.30	0.80	N/A	N/A
2X8/2X10 W/O RIB	N/A	19.30	N/A	3.60	5.10

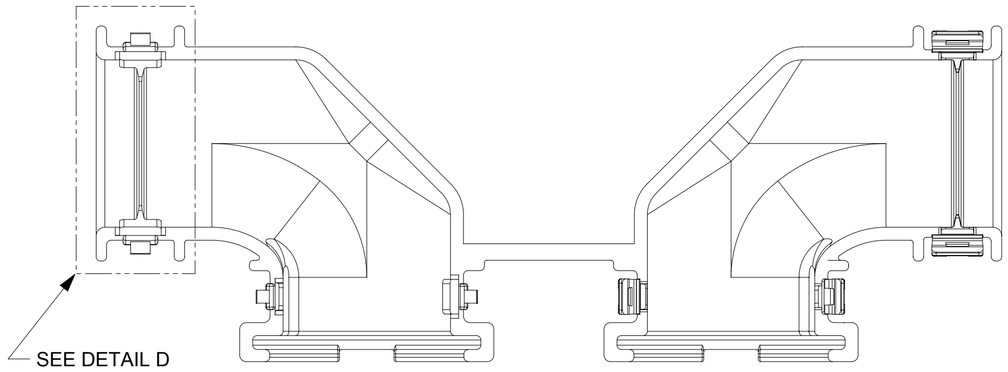

WITH RIB

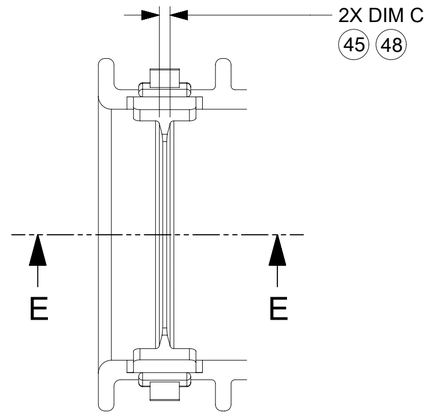

DETAIL D
SCALE 3:1

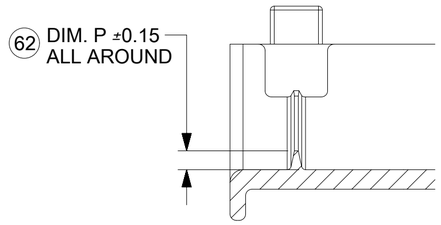

SECTION E-E

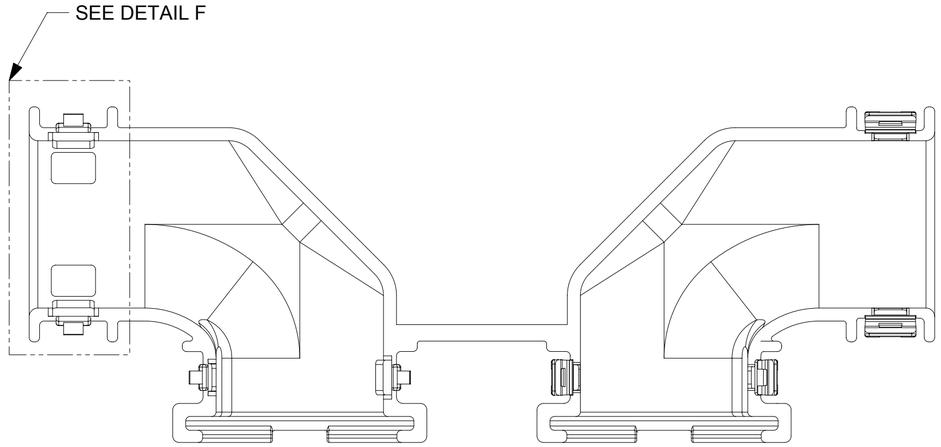

WITHOUT RIB

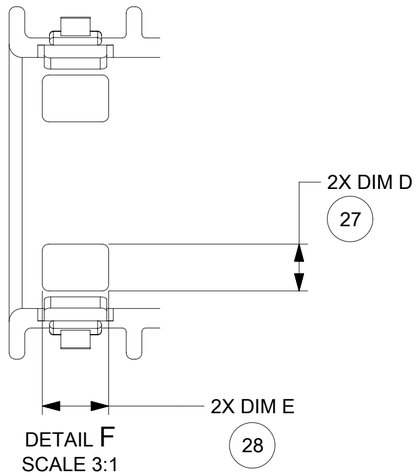

DETAIL F
SCALE 3:1

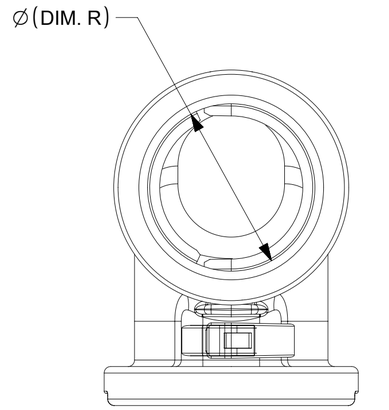

FOR WITH RIB AND WITHOUT RIB

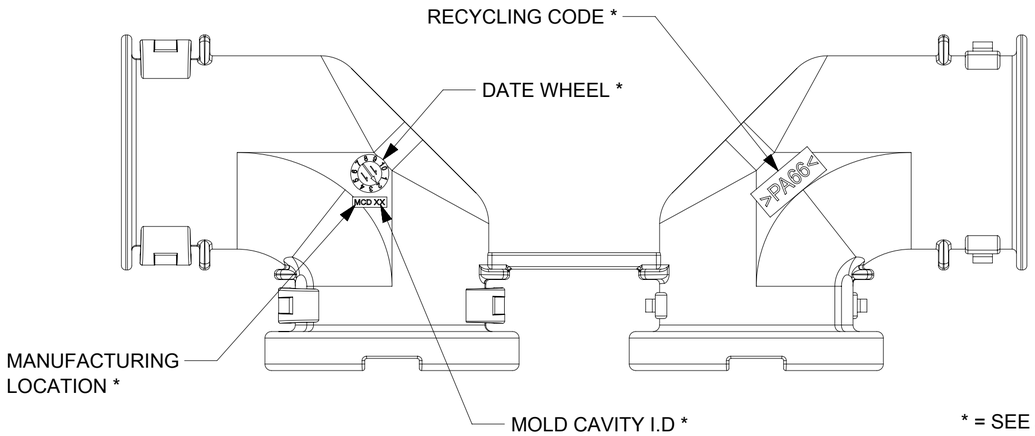

DUAL ROW

* = SEE ADAPTOR NOTES - 3.e.

THIS DRAWING CONTAINS INFORMATION THAT IS PROPRIETARY TO MOLEX ELECTRONIC TECHNOLOGIES, LLC AND SHOULD NOT BE USED WITHOUT WRITTEN PERMISSION

EC NO: 632862	2020/02/25		
DRWN: PPALLAN	2020/02/26		
CHK'D: MVANSLAMBROU	2020/02/26		
APPR: MVANSLAMBROU			
REV: A10			

GENERAL TOLERANCES (UNLESS SPECIFIED)

ANGULAR TOL ±		°
4 PLACES	±	
3 PLACES	±	
2 PLACES	±	0.1
1 PLACE	±	0.2
0 PLACES	±	

DRAFT WHERE APPLICABLE MUST REMAIN WITHIN DIMENSIONS

DIMENSION UNITS	mm
SCALE	2:1
DRWN BY	DDEB
DATE	2017/12/08
CHK'D BY	
DATE	
APPR BY	MVANSLAMBROU
DATE	2017/12/20
DRAWING SIZE	A2
THIRD ANGLE PROJECTION	

molex®

MX150 90° ADAPTOR

PRODUCT CUSTOMER DRAWING

SERIES	MATERIAL NUMBER	CUSTOMER
34951		

DOCUMENT NUMBER	DOC TYPE	DOC PART	SHEET NUMBER
349510001	PSD	000	3 OF 4

RELEASE STATUS	P1	RELEASE DATE	2020/02/26 00:51:12

FORMAT: master-tb-prod-A2
REVISION: G
DATE: 2017/02/06

SHEET DESCRIPTION
SINGLE ROW ADAPTOR DETAIL

CHARTED DIMENSION			
DESCRIPTION	DIMENSIONS		
	A	B	C
1X3 C.S. WITH RIB	7.1	9.95	0.75

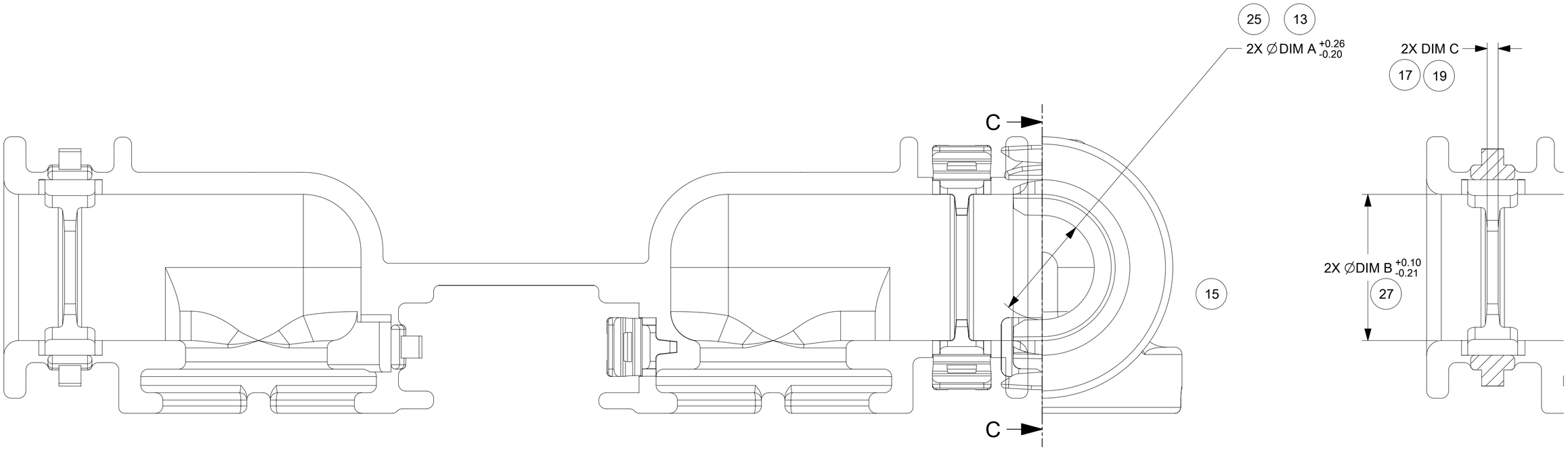

1X3 C.S.

PARTIAL SECTION C-C

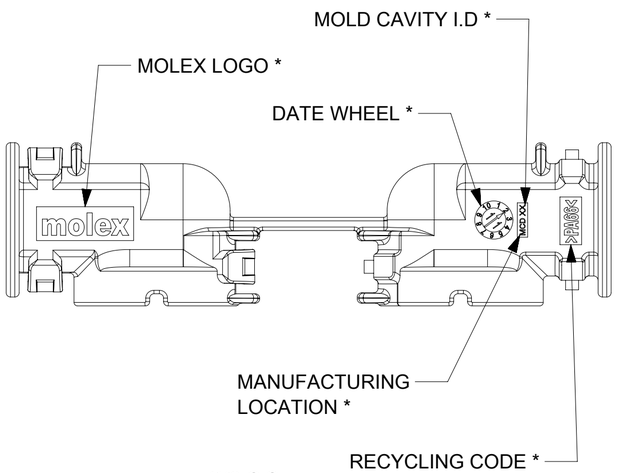

1X3 C.S.

* = SEE ADAPTOR NOTES - 3.e.

THIS DRAWING CONTAINS INFORMATION THAT IS PROPRIETARY TO MOLEX ELECTRONIC TECHNOLOGIES, LLC AND SHOULD NOT BE USED WITHOUT WRITTEN PERMISSION

DIMENSION UNITS	SCALE
mm	5:1

GENERAL TOLERANCES (UNLESS SPECIFIED)

ANGULAR TOL	±	°
4 PLACES	±	
3 PLACES	±	
2 PLACES	±	0.1
1 PLACE	±	0.2
0 PLACES	±	

TOOL NUMBER

Material:
Heat treat:
Finish:

CURRENT REV DESC:

EC NO:	632862	
DRWN:	PPALLAN	2020/02/25
CHK'D:	MVANSLAMBROU	2020/02/26
APPR:	MVANSLAMBROU	2020/02/26
ORIG DRWN BY:		
DDEB		2017/12/08

THIRD ANGLE PROJECTION | DRAWING: A2-SIZE | SERIES: 34951

molex

MX150 90° ADAPTOR

PRODUCT CUSTOMER DRAWING

DOCUMENT NUMBER	DOC TYPE	DOC PART	REVISION
349510001	PSD	000	A10

MATERIAL NUMBER | CUSTOMER | SHEET NUMBER: 4 OF 4

DOCUMENT STATUS	P1	RELEASE DATE	2020/02/26 00:51:12

FORMAT: master-tb-tool-A2
REVISION: H
DATE: 2018/5/1/18

TABLE OF CONTENTS

SHEET NO.	SHEET DESCRIPTION
1	NOTES AND BOM
2	CONFIGURATIONS
3-4	KEY CONFIGURATIONS
5	BLADE CONNECTOR ASSEMBLY
6	SYSTEM PACKAGING
7	BACKSHELL NOTES
8	BACKSHELL
9	BACKSHELL CONFIGURATIONS

NOTES: VALID UNLESS OTHERWISE SPECIFIED

1. GENERAL:
a. APPLICATION SPECIFICATION SEE: AS-33472-100
-CONTAINS: PRODUCT INTRODUCTION, PRODUCT SUMMARY, CONNECTOR ASSEMBLY, PACKAGING INFORMATION, CONNECTOR MATING, SERVICE INSTRUCTIONS, ELECTRICAL CONTINUITY CHECKING, CRIMPING, AND TROUBLESHOOTING.
-DESIGNED TO MATE WITH CONNECTOR AS SPECIFIED IN THE MATING CONNECTOR DRAWINGS CHART.
-ASSEMBLY SHIPPED WITH PLR IN PRE-LOCK POSITION (SEE PLR PRE-LOCK VIEW SHEET 5).

b. PRODUCT SPECIFICATION SEE: PS-160008-0001
CONTAINS: SCOPE, PRODUCT DESCRIPTION, INTEGRAL COMPONENTS AND ACCESSORIES, APPLICABLE DOCUMENTS AND SPECIFICATIONS, RATINGS, PERFORMANCE, PACKAGING, GUAGES AND FIXTURES, AND OTHER INFORMATION.
c. PACKAGING SPECIFICATION PER MOLEX DRAWING: SEE PACKAGING CHART.
d. PARTS MUST BE IN COMPLIANCE TO MOLEX CHEMICAL SUBSTANCES FOR PRODUCTS AND PACKAGING SPECIFICATION: QEHS-699000-300
e. DATA MUST BE SUBMITTED UNDER THE MOLEX PART NUMBER TO IMDS (COMPANY ID#13255)

2. DESIGN - MATERIALS:
a. SEE BOM TABLE IN SD-160011-0002

3. DESIGN - GEOMETRY:
a. THE 3-D CAD DATA IS BASIC (WITHOUT TOLERANCE) AND MASTER FOR THIS PART WITH THE EXCEPTION OF UNDERLINED DIMENSIONS. DIMENSIONAL INFORMATION NOT SHOWN ON THIS DRAWING IS DEFINED BY THE DATA FILE AT ITS LATEST REVISION.
b. GEOMETRIC DIMENSIONS AND TOLERANCES PER ASME Y14.5M-2009
c. EDGES AND UNDIMENSIONED DETAILS PER ISO13715
d. CORNERS SHOWN AS SHARP TO BE R 0.2 MAX.
e. LETTERING SHALL BE 0.15 MAX RAISED IN 0.25 MAX RECESS PAD. THIS INCLUDES RECYCLING CODE, CAVITY ID, VENDOR IDENTIFICATION, AND CUSTOMER MATERIAL NUMBER.
f. VISUAL DEFECTS SHALL MEET COSMETIC STANDARD PS-45499-002 (Class B).
g. LASER MARKING:
1. PART NUMBER
2. DAY OF THE YEAR
3. SHIFT
4. YEAR
FOR ADDITIONAL INFORMATION REFERENCE SECTION 5 UNDER PROCEDURES IN ES-34735-008.

PACKAGING

DESCRIPTION	DRAWING NO.
2X2	TBD
2X3	TBD
2X4	PK-36518-392
2X6	PK-31300-635
2X8	TBD
2X10	PK-31300-635

MATING CONNECTOR DRAWINGS

DESCRIPTION	MOLEX INLINE
2X2	TBD
2X3	TBD
2X4	SD-160008-0001
2X6	SD-160008-0001
2X8	TBD
2X10	SD-160018-0001

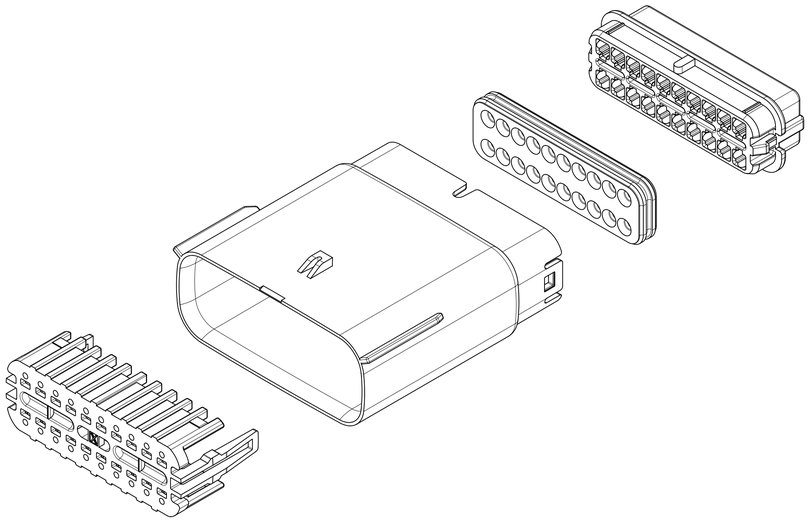

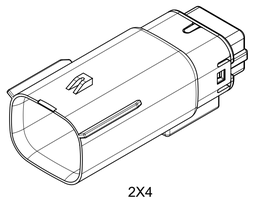

2X4

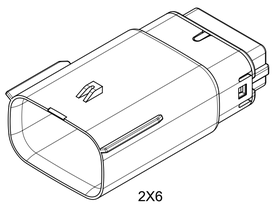

2X6

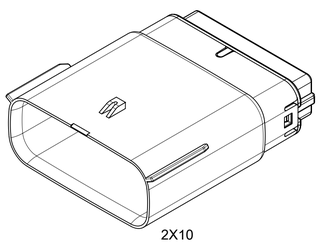

2X10

INSPECTION NUMBER LOG
LAST NUMBER:
ADDED:
REMOVED:

REV	REV DESCRIPTION
A5	ADDED MOLEX BACKSHELL DETAILS
A4	MIGRATED FROM COCREATE AND IMPORTED DXF FILES
A3	ADDED SHEET 6 & UPDATED PASS THRU
A2	UPDATED NOTES & BACKSHELL INFO
A1	CORRECTED DIM 16
A	INITIAL RELEASE

THIS DRAWING CONTAINS INFORMATION THAT IS PROPRIETARY TO MOLEX ELECTRONIC TECHNOLOGIES, LLC AND SHOULD NOT BE USED WITHOUT WRITTEN PERMISSION

SYMBOLS	DIMENSION UNITS	SCALE
A = 0	mm	1.5:1
C = 0	GENERAL TOLERANCES (UNLESS SPECIFIED)	
F = 0	ANGULAR TOL	± 3.0 °
S = 0	4 PLACES	±
= 0	3 PLACES	±
C = 0	2 PLACES	± 0.1
= 0	1 PLACE	± 0.2
= 0	0 PLACES	±
= 0	DRAFT WHERE APPLICABLE MUST REMAIN WITHIN DIMENSIONS	
= 0		

CURRENT REV DESC:

EC NO: 171650
DRWN: PMANJUNATHAC 2018/01/01
CHK'D: MVANSLAMBROU 2018/02/16
APPR: MVANSLAMBROU 2018/02/16

INITIAL REVISION:
DRWN: KBORUSZEWSKI 2014/02/19
APPR: VKOSHY 2014/03/05

THIRD ANGLE PROJECTION | DRAWING: A1-SIZE | SERIES: 160011

molex

MX150 GEN 2 BLADE
DUAL ROW SEALED ASSEMBLY MAT SEAL

PRODUCT CUSTOMER DRAWING

DOCUMENT NUMBER	DOC TYPE	DOC PART	REVISION
SD-160011-0001	PSD	001	A5

MATERIAL NUMBER | CUSTOMER: GENERAL MARKET | SHEET NUMBER: 1 OF 11

DOCUMENT STATUS	P1	RELEASE DATE	2018/02/16 22:02:24

Created in Creo Illustrate
REVISED in
DATE 2018/02/16

SHEET DESCRIPTION
CONFIGURATIONS

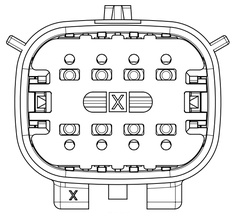

2X4

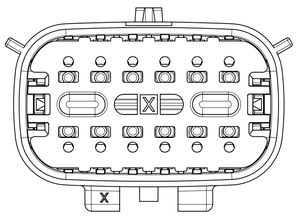

2X6

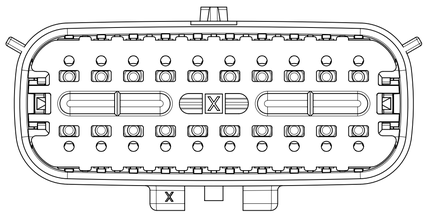

2X10

DOCUMENT STATUS	P1	RELEASE DATE	2018/02/16	22:02:24

SYMBOLS	
=	0
=	0
=	0
=	0
=	0
=	0
=	0
=	0
=	0

THIS DRAWING CONTAINS INFORMATION THAT IS PROPRIETARY TO MOLEX ELECTRONIC TECHNOLOGIES, LLC AND SHOULD NOT BE USED WITHOUT WRITTEN PERMISSION

DIMENSION UNITS	SCALE
mm	3:1

GENERAL TOLERANCES (UNLESS SPECIFIED)		
ANGULAR TOL	±	3.0 °
4 PLACES	±	
3 PLACES	±	
2 PLACES	±	0.1
1 PLACE	±	0.2
0 PLACES	±	

DRAFT WHERE APPLICABLE MUST REMAIN WITHIN DIMENSIONS

CURRENT REV DESC:

EC NO: 171650
DRWN: PMANJUNATHAC 2018/01/01
CHK'D: MVANSLAMBROU 2018/02/16
APPR: MVANSLAMBROU 2018/02/16

INITIAL REVISION:
DRWN: KBORUSZEWSKI 2014/02/19
APPR: VKOSHY 2014/03/05

THIRD ANGLE PROJECTION

DRAWING	SERIES
A1-SIZE	160011

molex

MX150 GEN 2 BLADE
DUAL ROW SEALED ASSEMBLY MAT SEAL

PRODUCT CUSTOMER DRAWING

DOCUMENT NUMBER	DOC TYPE	DOC PART	REVISION
SD-160011-0001	PSD	001	A5

MATERIAL NUMBER	CUSTOMER	SHEET NUMBER
	GENERAL MARKET	2 OF 11

FORMAT: master-tb-prod-A1
CHECKED: 2018/01/19
DATE: 2018/01/19

SHEET DESCRIPTION
KEY CONFIGURATIONS

2X4

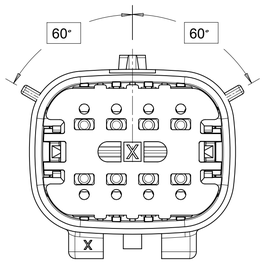

KEY A

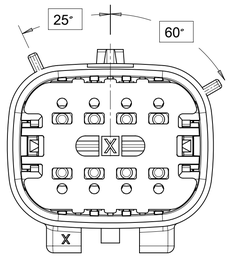

KEY B

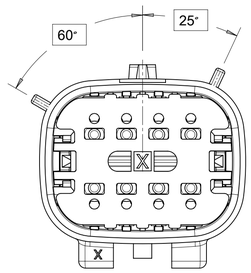

KEY C

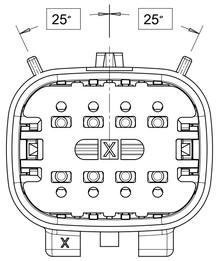

KEY D

SYMBOLS	
A	= 0
E	= 0
F	= 0
S	= 0
	= 0
C	= 0
	= 0
	= 0
	= 0

DIMENSION UNITS	SCALE
mm	3:1

GENERAL TOLERANCES (UNLESS SPECIFIED)		
ANGULAR TOL	±	3.0 °
4 PLACES	±	
3 PLACES	±	
2 PLACES	±	0.1
1 PLACE	±	0.2
0 PLACES	±	

DRAFT WHERE APPLICABLE MUST REMAIN WITHIN DIMENSIONS

THIS DRAWING CONTAINS INFORMATION THAT IS PROPRIETARY TO MOLEX ELECTRONIC TECHNOLOGIES, LLC AND SHOULD NOT BE USED WITHOUT WRITTEN PERMISSION

CURRENT REV DESC:

EC NO: 171650
DRWN: PMANJUNATHAC 2018/01/01
CHK'D: MVANSLAMBROU 2018/02/16
APPR: MVANSLAMBROU 2018/02/16

INITIAL REVISION:
DRWN: KBORUSZEWSKI 2014/02/19
APPR: VKOSHY 2014/03/05

THIRD ANGLE PROJECTION

DRAWING: A1-SIZE
SERIES: 160011

molex

MX150 GEN 2 BLADE
DUAL ROW SEALED ASSEMBLY MAT SEAL

PRODUCT CUSTOMER DRAWING

DOCUMENT NUMBER	DOC TYPE	DOC PART	REVISION
SD-160011-0001	PSD	001	A5

MATERIAL NUMBER	CUSTOMER	SHEET NUMBER
	GENERAL MARKET	3 OF 11

DOCUMENT STATUS	P1	RELEASE DATE	2018/02/16 22:02:24

TEMPLATE: master-tb-prod-A
REVISION: 1
DATE: 2018/01/10

SHEET DESCRIPTION
KEY CONFIGURATIONS CONT.

2X6

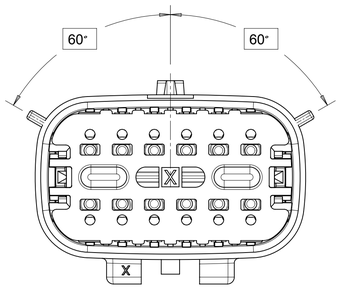

KEY A

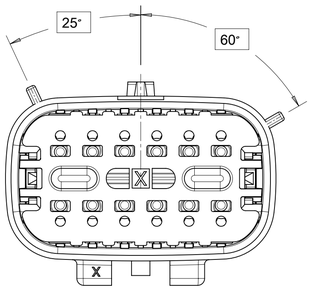

KEY B

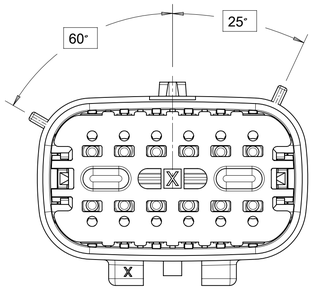

KEY C

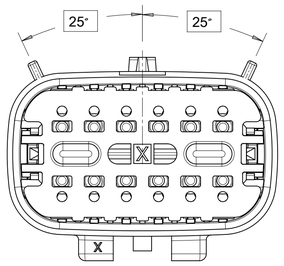

KEY D

2X10

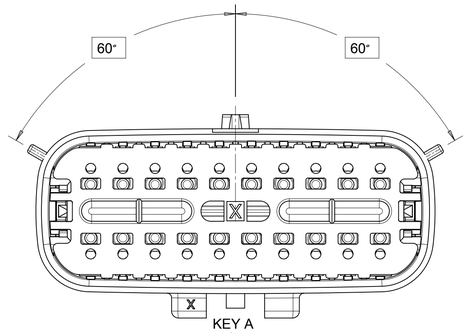

KEY A

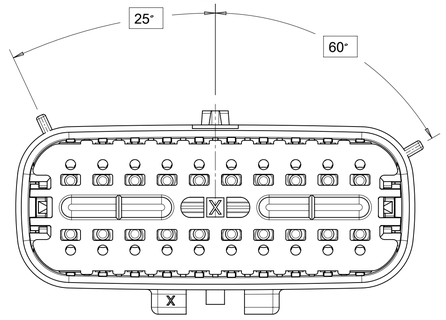

KEY B

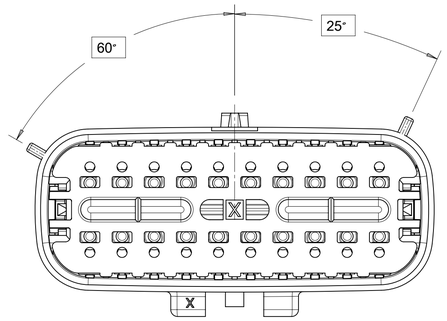

KEY C

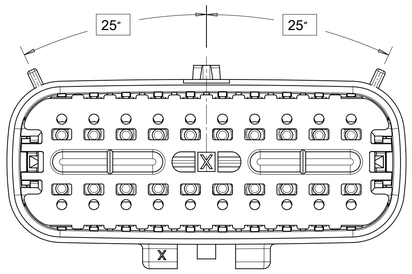

KEY D

SYMBOLS
= 0
= 0
= 0
= 0
= 0
= 0
= 0
= 0
= 0

THIS DRAWING CONTAINS INFORMATION THAT IS PROPRIETARY TO MOLEX ELECTRONIC TECHNOLOGIES, LLC AND SHOULD NOT BE USED WITHOUT WRITTEN PERMISSION

DIMENSION UNITS	SCALE
mm	3:1

GENERAL TOLERANCES (UNLESS SPECIFIED)		
ANGULAR TOL	±	3.0 °
4 PLACES	±	
3 PLACES	±	
2 PLACES	±	0.1
1 PLACE	±	0.2
0 PLACES	±	

DRAFT WHERE APPLICABLE MUST REMAIN WITHIN DIMENSIONS

CURRENT REV DESC:

EC NO: 171650
DRWN: PMANJUNATHAC 2018/01/01
CHK'D: MVANSLAMBROU 2018/02/16
APPR: MVANSLAMBROU 2018/02/16

INITIAL REVISION:
DRWN: KBORUSZEWSKI 2014/02/19
APPR: VKOSHY 2014/03/05

THIRD ANGLE PROJECTION | DRAWING: A1-SIZE | SERIES: 160011

molex

MX150 GEN 2 BLADE
DUAL ROW SEALED ASSEMBLY MAT SEAL

PRODUCT CUSTOMER DRAWING

DOCUMENT NUMBER	DOC TYPE	DOC PART	REVISION
SD-160011-0001	PSD	001	A5

MATERIAL NUMBER	CUSTOMER	SHEET NUMBER
	GENERAL MARKET	4 OF 11

DOCUMENT STATUS	P1	RELEASE DATE	2018/02/16 22:02:24

FORMAT: master-tb-prod-A1
TEMPLATE: 000000
DATE: 2018/01/16

SHEET DESCRIPTION
BLADE CONNECTOR ASSEMBLY

CHARTED DIMENSION			
DESCRIPTION	DIMENSIONS		
	A	B	C
2X2	TBD	TBD	TBD
2X3	TBD	TBD	TBD
2X4	12.46	1.75	27.9
2X6	15.96	1.75	32.7
2X8	TBD	TBD	TBD
2X10	22.97	1.75	46.4

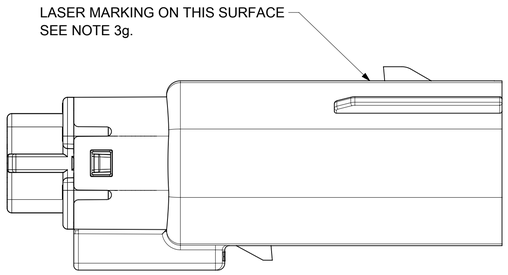

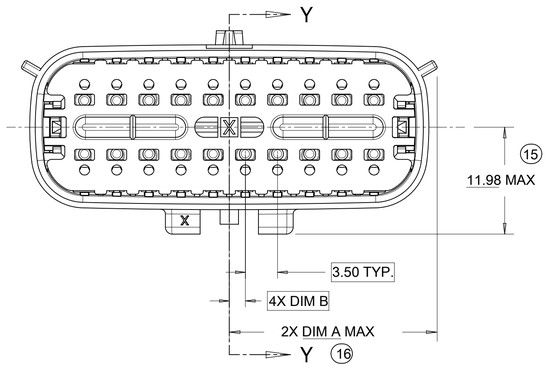

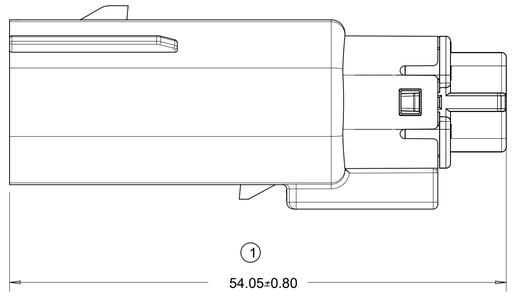

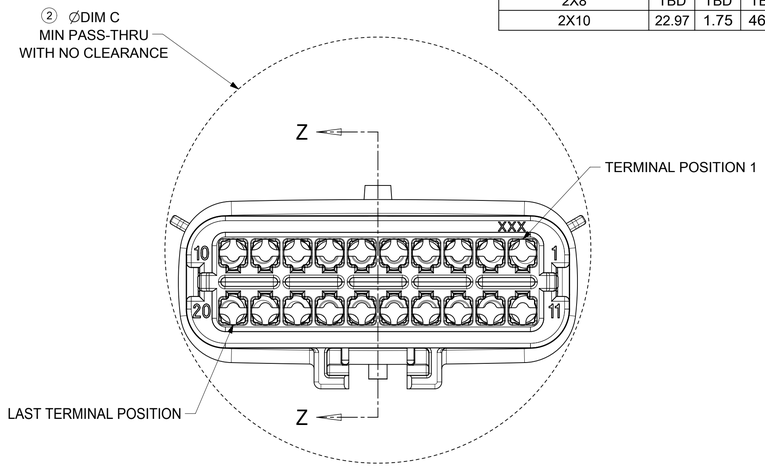

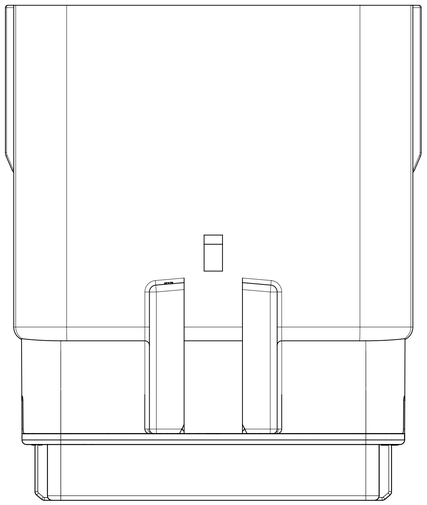

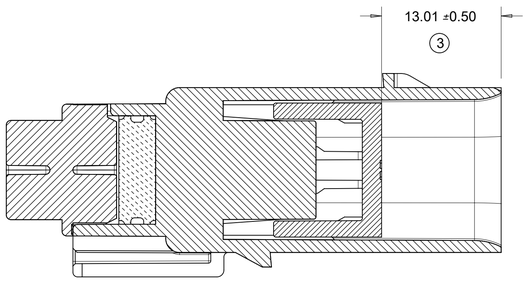

PRIMARY LOCK REINFORCER (PLR) SHOWN
IN PRE-STAGE POSITION

SECTION Z-Z

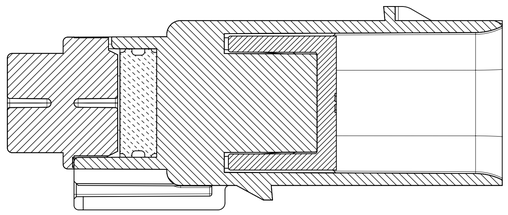

PRIMARY LOCK REINFORCER (PLR) SHOWN
IN FINAL-LOCK POSITION

SECTION Y-Y

SYMBOLS	
A =	0
C =	0
D =	0
S =	0
▼ =	0
C =	0
☒ =	0
■ =	0
=	0

THIS DRAWING CONTAINS INFORMATION THAT IS PROPRIETARY TO MOLEX ELECTRONIC TECHNOLOGIES, LLC AND SHOULD NOT BE USED WITHOUT WRITTEN PERMISSION

DIMENSION UNITS	SCALE
mm	3:1

GENERAL TOLERANCES (UNLESS SPECIFIED)		
ANGULAR TOL	±	3.0 °
4 PLACES	±	
3 PLACES	±	
2 PLACES	±	0.1
1 PLACE	±	0.2
0 PLACES	±	

DRAFT WHERE APPLICABLE MUST REMAIN WITHIN DIMENSIONS

CURRENT REV DESC:

EC NO: 171650
DRWN: PMANJUNATHAC 2018/01/01
CHK'D: MVANSLAMBROU 2018/02/16
APPR: MVANSLAMBROU 2018/02/16

INITIAL REVISION:
DRWN: KBORUSZEWSKI 2014/02/19
APPR: VKOSHY 2014/03/05

THIRD ANGLE PROJECTION | DRAWING: A1-SIZE | SERIES: 160011

molex

MX150 GEN 2 BLADE
DUAL ROW SEALED ASSEMBLY MAT SEAL

PRODUCT CUSTOMER DRAWING

DOCUMENT NUMBER	DOC TYPE	DOC PART	REVISION
SD-160011-0001	PSD	001	A5

MATERIAL NUMBER	CUSTOMER	SHEET NUMBER
	GENERAL MARKET	5 OF 11

DOCUMENT STATUS	P1	RELEASE DATE	2018/02/16 22:02:24

PDMWORK Version 10 (build 47)
DATE: 2018/02/16
TIME: 22:02:24

SHEET DESCRIPTION
SYSTEM PACKAGING

CHARTED DIMENSION				
CKT	BLADE CONFIGURATION	RECEPTACLE CONFIGURATION	DIMENSIONS	
			D	E
2X4	STANDARD	STANDARD	30.1	28.48
		CLIPSLOT	31.1	28.48
2X6	STANDARD	STANDARD	36.3	35.5
		CLIPSLOT	36.3	35.5
2X10	STANDARD	STANDARD	49.8	49.5
		CLIPSLOT	49.8	49.5

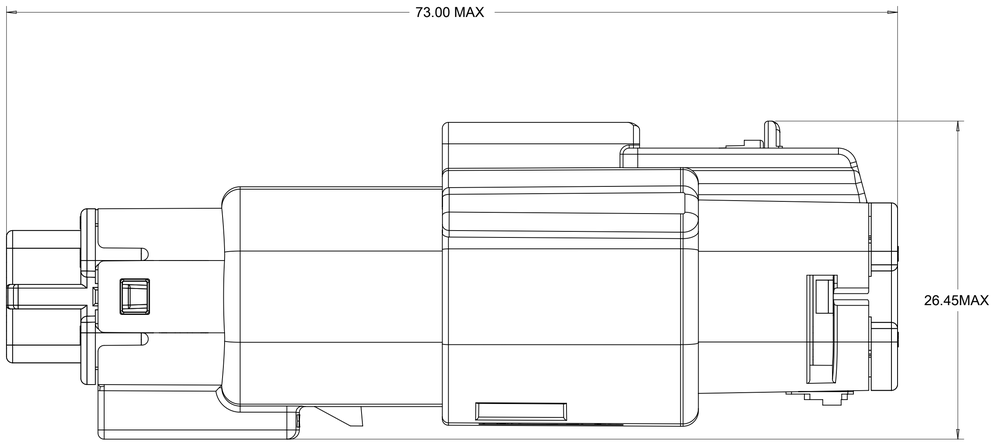

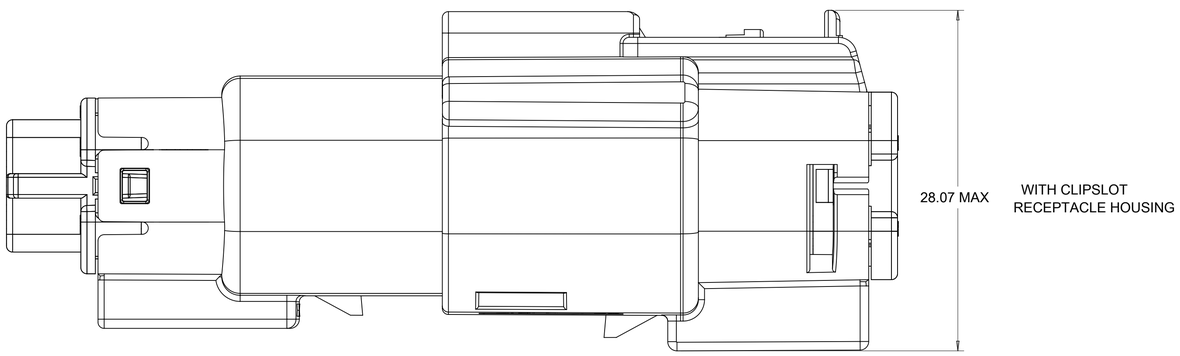

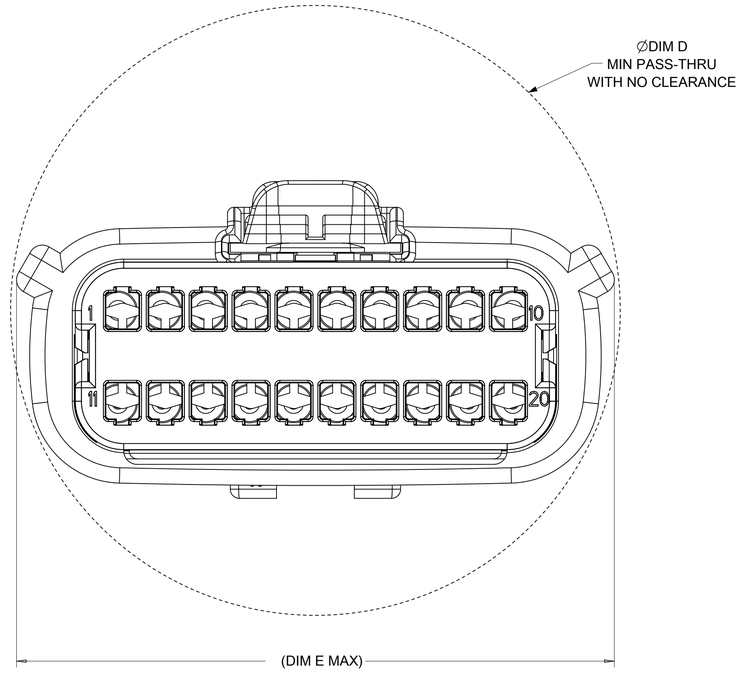

SYMBOLS	
A = 0	
C = 0	
F = 0	
S = 0	
= 0	
C = 0	
= 0	
= 0	
= 0	

THIS DRAWING CONTAINS INFORMATION THAT IS PROPRIETARY TO MOLEX ELECTRONIC TECHNOLOGIES, LLC AND SHOULD NOT BE USED WITHOUT WRITTEN PERMISSION

DIMENSION UNITS	SCALE
mm	4:1

GENERAL TOLERANCES (UNLESS SPECIFIED)		
ANGULAR TOL	±	3.0 °
4 PLACES	±	
3 PLACES	±	
2 PLACES	±	0.1
1 PLACE	±	0.2
0 PLACES	±	

DRAFT WHERE APPLICABLE MUST REMAIN WITHIN DIMENSIONS

CURRENT REV DESC:

EC NO: 171650
DRWN: PMANJUNATHAC 2018/01/01
CHK'D: MVANSLAMBROU 2018/02/16
APPR: MVANSLAMBROU 2018/02/16

INITIAL REVISION:
DRWN: KBORUSZEWSKI 2014/02/19
APPR: VKOSHY 2014/03/05

THIRD ANGLE PROJECTION | DRAWING: A1-SIZE | SERIES: 160011

molex

MX150 GEN 2 BLADE
DUAL ROW SEALED ASSEMBLY MAT SEAL

PRODUCT CUSTOMER DRAWING

DOCUMENT NUMBER	DOC TYPE	DOC PART	REVISION
SD-160011-0001	PSD	001	A5

MATERIAL NUMBER	CUSTOMER	SHEET NUMBER
	GENERAL MARKET	6 OF 11

DOCUMENT STATUS	P1	RELEASE DATE	2018/02/16 22:02:24

SHEET DESCRIPTION
BACKSHELL NOTES

BACKSHELL NOTES: VALID UNLESS OTHERWISE SPECIFIED

1. GENERAL:
a. APPLICATION SPECIFICATION SEE: AS-34951-001
-DESIGNED TO MATE WITH BLADE SEALED ASSEMBLY
-SPECIFIED IN MOLEX DRAWING SD-33482-0001
-SYSTEM TO BE USED WITH WIRE WITHIN DIAMETER RANGE OF 1.2mm TO 2.69mm
-COMPONENTS ARE OPTIONAL AND MUST BE PURCHASED SEPERATELY
-DESIGN IS OWNED BY SCHLEMMER FOR SCHLEMMER BACKSHELL.
-DESIGN IS OWNED BY MOLEX FOR MOLEX BACKSHELL.
-90˚ ADAPTOR DESIGN IS OWNED BY MOLEX.
-FOR ADDITIONAL INFORMATION SEE THE BACKSHELL COMPONENT DRAWING SD-34950-0001

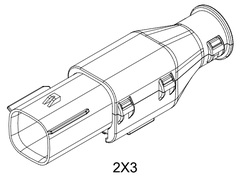

2X3

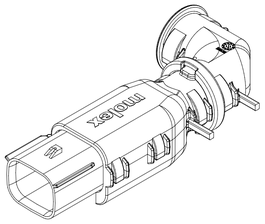

2X4

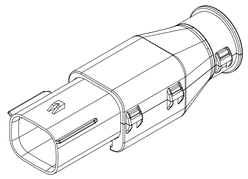

2X4

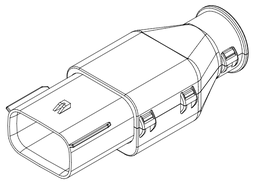

2X6

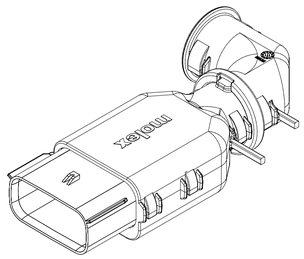

2X8

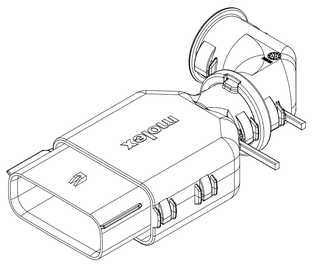

2X10

BACKSHELL CUSTOMER
MODEL NUMBER LEGEND

34950-XXXX

CUSTOMER MODEL COMPONENTS
- 0 - SCHLEMMER BACKSHELL ONLY
- 1 - SCHLEMMER BACKSHELL & MX150 HOUSING KEY A ASSEMBLY
- 2 - SCHLEMMER BACKSHELL & MX150 HOUSING KEY B ASSEMBLY
- 3 - SCHLEMMER BACKSHELL & MX150 HOUSING KEY C ASSEMBLY
- 4 - SCHLEMMER BACKSHELL & MX150 HOUSING KEY D ASSEMBLY
- 5 - MOLEX BACKSHELL ONLY
- 6 - MOLEX BACKSHELL & MX150 HOUSING KEY A ASSEMBLY
- 7 - MOLEX BACKSHELL & MX150 HOUSING KEY B ASSEMBLY
- 8 - MOLEX BACKSHELL & MX150 HOUSING KEY C ASSEMBLY
- 9 - MOLEX BACKSHELL & MX150 HOUSING KEY D ASSEMBLY

BACKSHELL FEATURES
- 1 - WITH RIBS
- 2 - WITHOUT RIBS
- 3 - 90˚ ADAPTOR

MX150 CIRCUIT SIZE 04, 06, 08, 12, 16, 20

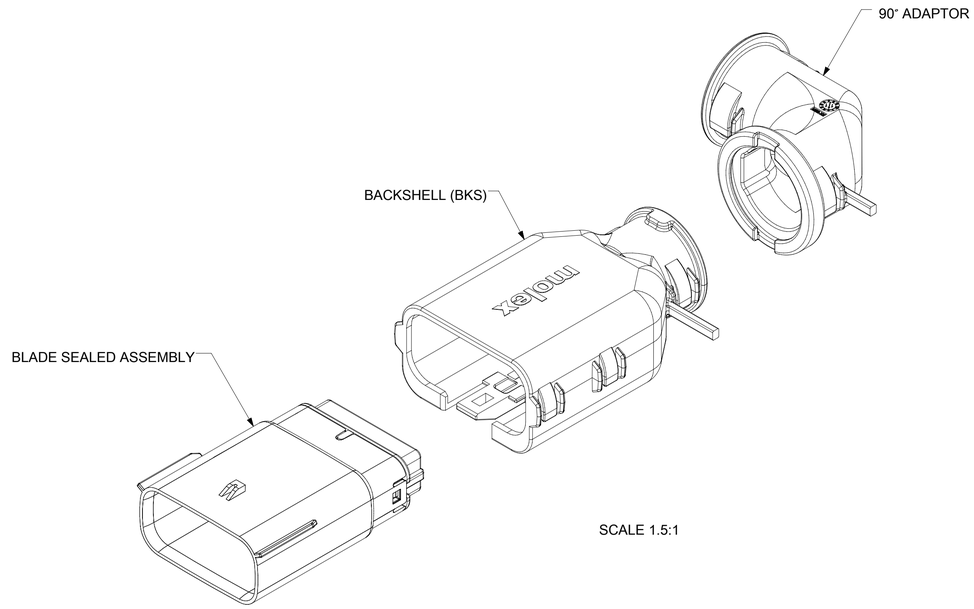

SCALE 1.5:1

SYMBOLS	
F/A	= 0
E/C	= 0
E/F	= 0
S	= 0
▼	= 0
C	= 0
☒	= 0
■	= 0
V	= 0

THIS DRAWING CONTAINS INFORMATION THAT IS PROPRIETARY TO MOLEX ELECTRONIC TECHNOLOGIES, LLC AND SHOULD NOT BE USED WITHOUT WRITTEN PERMISSION

DIMENSION UNITS	SCALE
mm	1.5:1

GENERAL TOLERANCES (UNLESS SPECIFIED)

ANGULAR TOL	±	3.0 °
4 PLACES	±	
3 PLACES	±	
2 PLACES	±	0.1
1 PLACE	±	0.2
0 PLACES	±	

DRAFT WHERE APPLICABLE MUST REMAIN WITHIN DIMENSIONS

CURRENT REV DESC:

EC NO: 171650
DRWN: PMANJUNATHAC 2018/01/01
CHK'D: MVANSLAMBROU 2018/02/16
APPR: MVANSLAMBROU 2018/02/16

INITIAL REVISION:
DRWN: KBORUSZEWSKI 2014/02/19
APPR: VKOSHY 2014/03/05

THIRD ANGLE PROJECTION | DRAWING: A1-SIZE | SERIES: 160011

molex

MX150 GEN 2 BLADE
DUAL ROW SEALED ASSEMBLY MAT SEAL

PRODUCT CUSTOMER DRAWING

DOCUMENT NUMBER	DOC TYPE	DOC PART	REVISION
SD-160011-0001	PSD	001	A5

MATERIAL NUMBER	CUSTOMER	SHEET NUMBER
	GENERAL MARKET	7 OF 11

DOCUMENT STATUS	P1	RELEASE DATE	2018/02/16 22:02:24

FORMAT: molex-tb-prod-A1-
DEVIATION: 0
DATE: 2018/01/16

SHEET DESCRIPTION
SCHLEMMER BACKSHELL

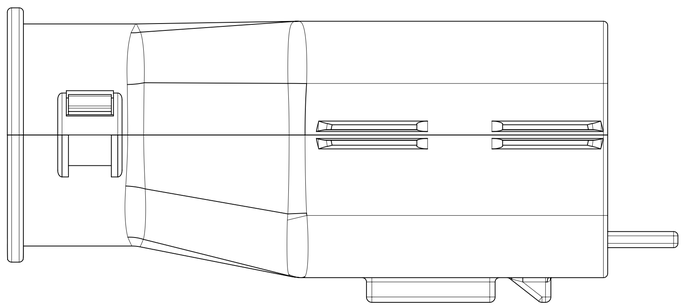

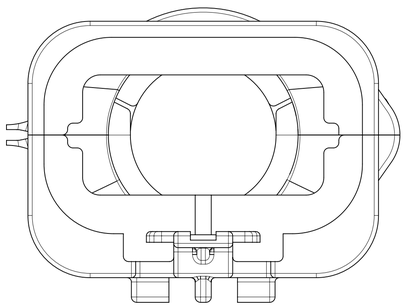

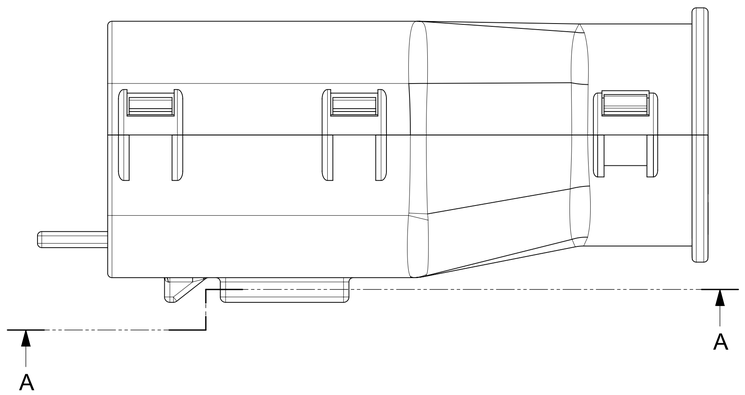

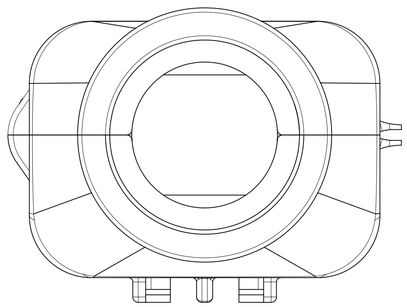

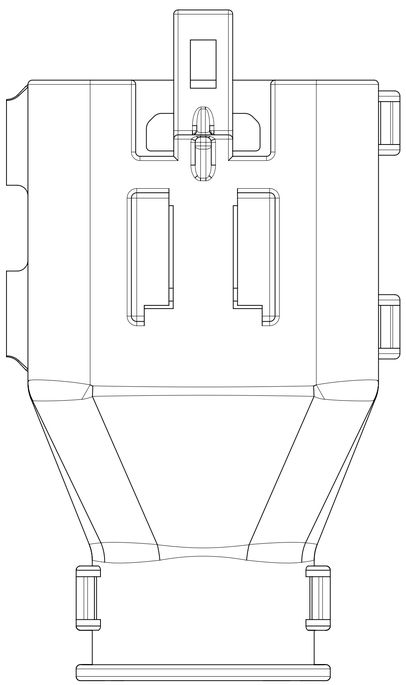

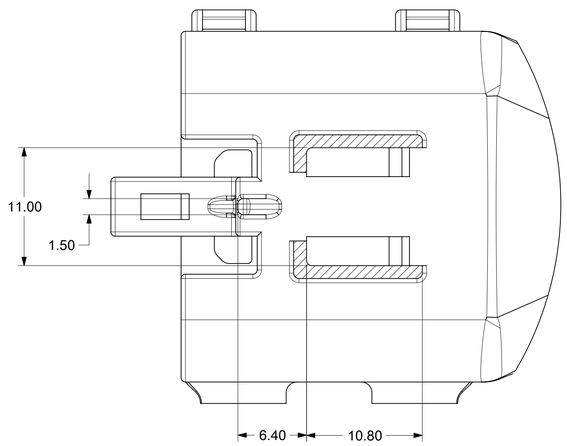

Partial A-A
SCALE 7:2

SYMBOLS	
E/A	= 0
E/C	= 0
E/F	= 0
S	= 0
▼	= 0
C	= 0
☒	= 0
■	= 0
V	= 0

THIS DRAWING CONTAINS INFORMATION THAT IS PROPRIETARY TO MOLEX ELECTRONIC TECHNOLOGIES, LLC AND SHOULD NOT BE USED WITHOUT WRITTEN PERMISSION

DIMENSION UNITS	SCALE
mm	3.5:1

GENERAL TOLERANCES (UNLESS SPECIFIED)		
ANGULAR TOL	±	3.0 °
4 PLACES	±	
3 PLACES	±	
2 PLACES	±	0.1
1 PLACE	±	0.2
0 PLACES	±	

DRAFT WHERE APPLICABLE MUST REMAIN WITHIN DIMENSIONS

CURRENT REV DESC:

EC NO: 171650
DRWN: PMANJUNATHAC 2018/01/01
CHK'D: MVANSLAMBROU 2018/02/16
APPR: MVANSLAMBROU 2018/02/16

INITIAL REVISION:
DRWN: KBORUSZEWSKI 2014/02/19
APPR: VKOSHY 2014/03/05

THIRD ANGLE PROJECTION

DRAWING	SERIES
A1-SIZE	160011

molex

MX150 GEN 2 BLADE
DUAL ROW SEALED ASSEMBLY MAT SEAL

PRODUCT CUSTOMER DRAWING

DOCUMENT NUMBER	DOC TYPE	DOC PART	REVISION
SD-160011-0001	PSD	001	A5

MATERIAL NUMBER	CUSTOMER	SHEET NUMBER
	GENERAL MARKET	8 OF 11

DOCUMENT STATUS	P1	RELEASE DATE	2018/02/16 22:02:24

SHEET DESCRIPTION
MOLEX BACKSHELL

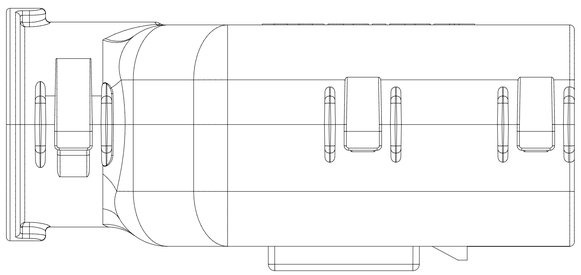

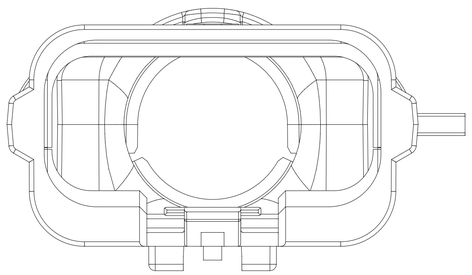

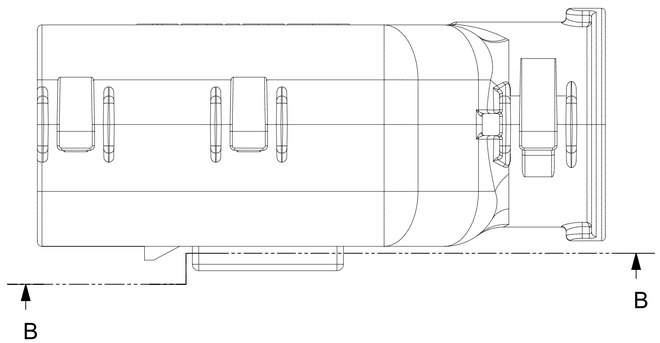

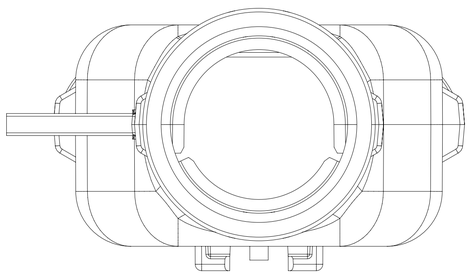

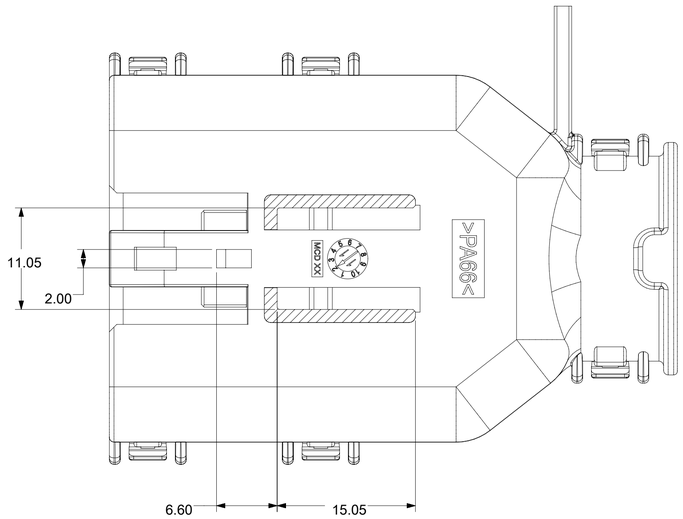

SECTION B-B

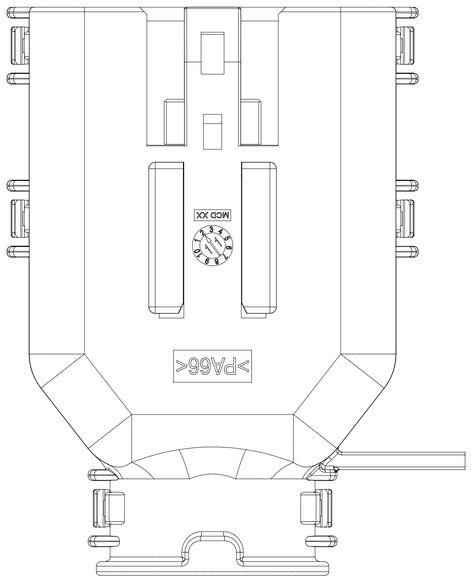

SYMBOLS	
A	= 0
C	= 0
F	= 0
S	= 0
	= 0
C	= 0
	= 0
	= 0
V	= 0

THIS DRAWING CONTAINS INFORMATION THAT IS PROPRIETARY TO MOLEX ELECTRONIC TECHNOLOGIES, LLC AND SHOULD NOT BE USED WITHOUT WRITTEN PERMISSION

DIMENSION UNITS	SCALE
mm	1:1

GENERAL TOLERANCES (UNLESS SPECIFIED)		
ANGULAR TOL	±	3.0 °
4 PLACES	±	
3 PLACES	±	
2 PLACES	±	0.1
1 PLACE	±	0.2
0 PLACES	±	

DRAFT WHERE APPLICABLE MUST REMAIN WITHIN DIMENSIONS

CURRENT REV DESC:

EC NO: 171650
DRWN: PMANJUNATHAC 2018/01/01
CHK'D: MVANSLAMBROU 2018/02/16
APPR: MVANSLAMBROU 2018/02/16

INITIAL REVISION:
DRWN: KBORUSZEWSKI 2014/02/19
APPR: VKOSHY 2014/03/05

THIRD ANGLE PROJECTION | DRAWING: A1-SIZE | SERIES: 160011

molex

MX150 GEN 2 BLADE
DUAL ROW SEALED ASSEMBLY MAT SEAL

PRODUCT CUSTOMER DRAWING

DOCUMENT NUMBER	DOC TYPE	DOC PART	REVISION
SD-160011-0001	PSD	001	A5

MATERIAL NUMBER	CUSTOMER	SHEET NUMBER
	GENERAL MARKET	9 OF 11

DOCUMENT STATUS	P1	RELEASE DATE	2018/02/16 22:02:24

TEMPLATE: master-landscape
REVISION: H
DATE: 2016/01/15

SHEET DESCRIPTION
SCHLEMMER BACKSHELL CONFIGURATIONS

CHARTED DIMENSION							
CKT	BLADE CONFIGURATION	RECEPTACLE CONFIGURATION	DIMENSIONS				
			M	N	P	R	S
2X6	STANDARD	STANDARD	106.83	37.84	37.27	35.83	36.83

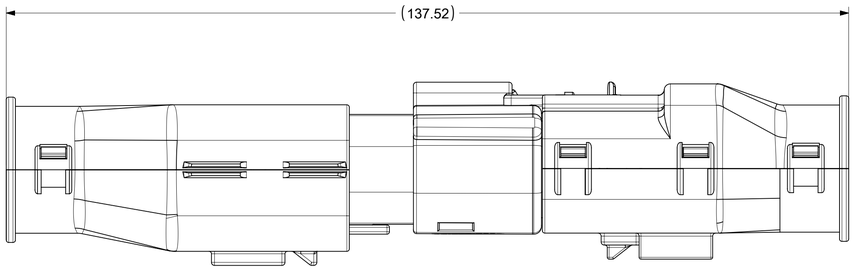

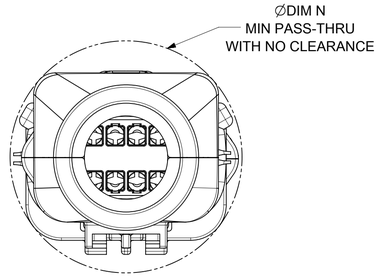

OVERALL MATED SYSTEM WITH BLADE AND RECEPTACLE BACKSHELL

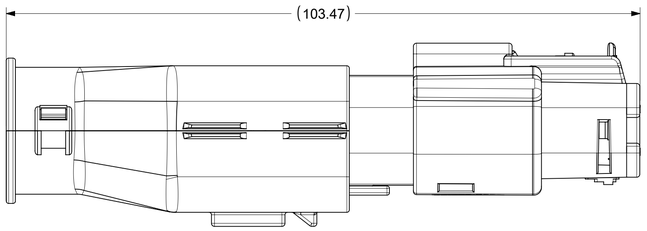

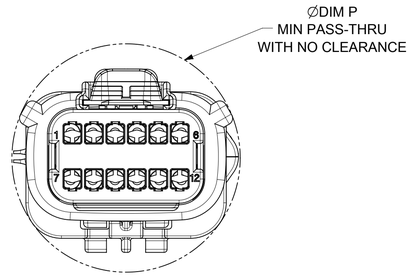

OVERALL MATED SYSTEM WITH BLADE BACKSHELL

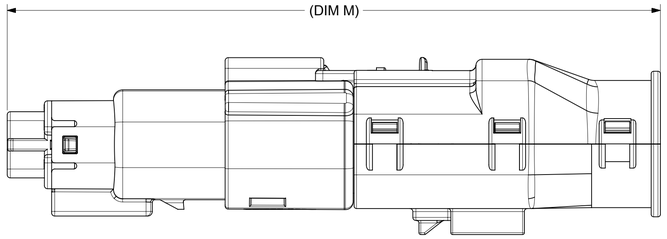

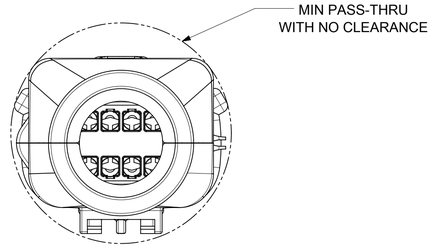

OVERALL MATED SYSTEM WITH RECEPTACLE BACKSHELL

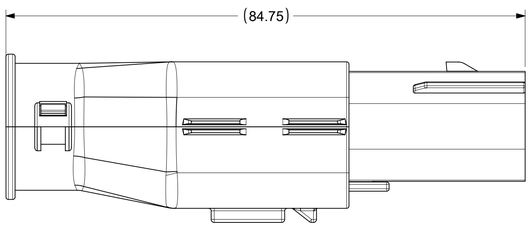

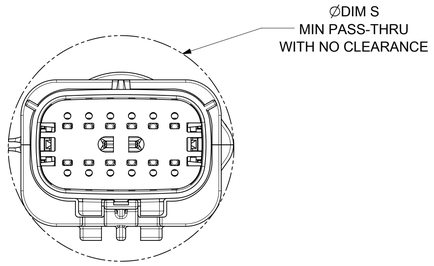

BLADE SEALED ASSEMBLY WITH BLADE BACKSHELL

SYMBOLS	
A	= 0
C	= 0
E	= 0
S	= 0
▼	= 0
C	= 0
☒	= 0
■	= 0
V	= 0

THIS DRAWING CONTAINS INFORMATION THAT IS PROPRIETARY TO MOLEX ELECTRONIC TECHNOLOGIES, LLC AND SHOULD NOT BE USED WITHOUT WRITTEN PERMISSION

DIMENSION UNITS	SCALE
mm	2:1

GENERAL TOLERANCES (UNLESS SPECIFIED)		
ANGULAR TOL	±	3.0 °
4 PLACES	±	
3 PLACES	±	
2 PLACES	±	0.1
1 PLACE	±	0.2
0 PLACES	±	

DRAFT WHERE APPLICABLE MUST REMAIN WITHIN DIMENSIONS

CURRENT REV DESC:

EC NO: 171650
DRWN: PMANJUNATHAC 2018/01/01
CHK'D: MVANSLAMBROU 2018/02/16
APPR: MVANSLAMBROU 2018/02/16

INITIAL REVISION:
DRWN: KBORUSZEWSKI 2014/02/19
APPR: VKOSHY 2014/03/05

THIRD ANGLE PROJECTION | DRAWING: A1-SIZE | SERIES: 160011

molex

MX150 GEN 2 BLADE
DUAL ROW SEALED ASSEMBLY MAT SEAL

PRODUCT CUSTOMER DRAWING

DOCUMENT NUMBER	DOC TYPE	DOC PART	REVISION
SD-160011-0001	PSD	001	A5

MATERIAL NUMBER	CUSTOMER	SHEET NUMBER
	GENERAL MARKET	10 OF 11

DOCUMENT STATUS	P1	RELEASE DATE	2018/02/16 22:02:24

TEMPLATE: PRODUCT DRAWING
REVISION: H
DATE: 2018/01/19

SHEET DESCRIPTION
MOLEX BACKSHELL CONFIGURATIONS

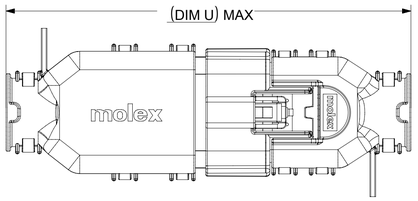

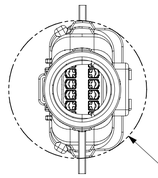

MIN PASS-THRU
WITH NO CLEARANCE

OVERALL MATED SYSTEM WITH BLADE AND RECEPTACLE BACKSHELL

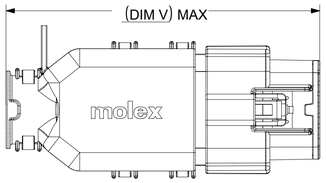

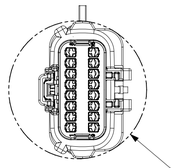

MIN PASS-THRU
WITH NO CLEARANCE

OVERALL MATED SYSTEM WITH BLADE BACKSHELL

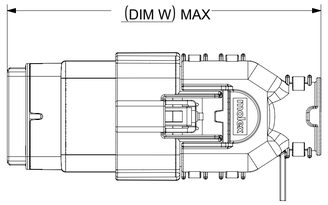

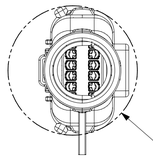

MIN PASS-THRU
WITH NO CLEARANCE

OVERALL MATED SYSTEM WITH RECEPTACLE BACKSHELL

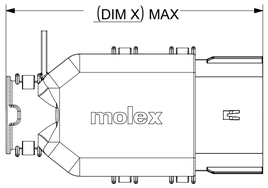

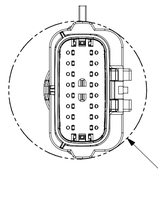

MIN PASS-THRU
WITH NO CLEARANCE

BLADE SEALED ASSEMBLY WITH BLADE BACKSHELL

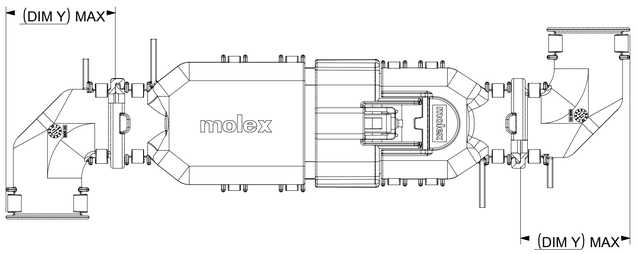

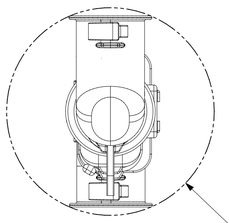

MIN PASS-THRU
WITH NO CLEARANCE

ADD THE VALUE OF 'Y' TO THE TOTAL DIMENSION
WHENEVER ADAPTOR IS USED

CHARTED DIMENSIONS

CKT	BLADE CONFIGURATION	RECEPTACLE CONFIGURATION	DIMENSIONS									
			U	V	W	X	Y	AA	AB	AC	AD	AE
2X4	STANDARD	STANDARD	115.29	94.34	93.98	75.62	32.10	32.93	32.54	32.85	31.76	56.81
2X8	STANDARD	STANDARD	N/A	N/A	N/A	N/A	N/A	N/A	N/A	N/A	N/A	N/A
2X10	STANDARD	STANDARD	132.54	102.79	102.78	84.07	36.10	45.44	45.44	42.65	45.44	68.18

SYMBOLS	
5	= 0
4	= 0
3	= 0
5	= 0
▼	= 0
2	= 0
☒	= 0
■	= 0
6	= 0

THIS DRAWING CONTAINS INFORMATION THAT IS PROPRIETARY TO MOLEX ELECTRONIC TECHNOLOGIES, LLC AND SHOULD NOT BE USED WITHOUT WRITTEN PERMISSION

DIMENSION UNITS	SCALE
mm	1:1

GENERAL TOLERANCES (UNLESS SPECIFIED)		
ANGULAR TOL	±	3.0 °
4 PLACES	±	
3 PLACES	±	
2 PLACES	±	0.1
1 PLACE	±	0.2
0 PLACES	±	

DRAFT WHERE APPLICABLE MUST REMAIN WITHIN DIMENSIONS

CURRENT REV DESC:

EC NO: 171650
DRWN: PMANJUNATHAC 2018/01/01
CHK'D: MVANSLAMBROU 2018/02/16
APPR: MVANSLAMBROU 2018/02/16

INITIAL REVISION:
DRWN: KBORUSZEWSKI 2014/02/19
APPR: VKOSHY 2014/03/05

THIRD ANGLE PROJECTION | DRAWING: A1-SIZE | SERIES: 160011

molex

MX150 GEN 2 BLADE
DUAL ROW SEALED ASSEMBLY MAT SEAL

PRODUCT CUSTOMER DRAWING

DOCUMENT NUMBER	DOC TYPE	DOC PART	REVISION
SD-160011-0001	PSD	001	A5

MATERIAL NUMBER	CUSTOMER	SHEET NUMBER
	GENERAL MARKET	11 OF 11

DOCUMENT STATUS	P1	RELEASE DATE	2018/02/16 22:02:24

MX150 GEN 2 BLADE 2X4 SEALED ASSEMBLY MAT SEAL
BOM AND PIN OUT SHEET

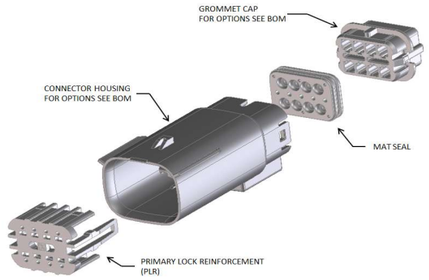

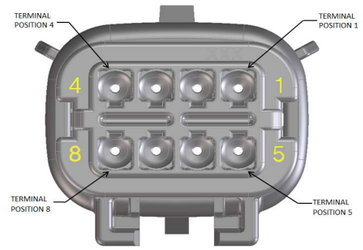

ABBREVIATION	DESCRIPTION	COLOR	MATERIAL
A-BLK-CLIP	HOUSING KEYING OPTION A WITH CLIPSLOT	BLACK	SPS/NYLON GF20
B-LG-CLIP	HOUSING KEYING OPTION B WITH CLIPSLOT	LIGHT GRAY	SPS/NYLON GF20
C-DG-CLIP	HOUSING KEYING OPTION C WITH CLIPSLOT	DARK GRAY	SPS/NYLON GF20
D-SG-CLIP	HOUSING KEYING OPTION D WITH CLIPSLOT	STONE GRAY	SPS/NYLON GF20
GCP	GROMMET CAP (PLUGGED)	BLACK	SPS/NYLON GF20
GCO	GROMMET CAP (OPEN)	BLACK	SPS/NYLON GF20
PLR-1	PLR-1	NATURAL	SPS/NYLON GF20
PLR-3	PLR-3	NATURAL	SPS/NYLON GF20
M-R	MAT SEAL	RUST RED	INHERENTLY LUBRICATED SILICONE
M-B	MAT SEAL	ROYAL BLUE	INHERENTLY LUBRICATED SILICONE

FOR ADDITIONAL INFORMATION SEE SD-160011-0001

ASSEMBLY DESCRIPTION	ASSEMBLY PART NUMBER	COMPONENT THE PRESENCE OF AN ABBREVIATION INDICATES THE PRESENCE OF THAT COMPONENT.				BLOCKED TERMINALS CAVITY WITH A NUMBER INDICATES BLOCKED TERMINAL POSITION CAVITY WITHOUT A NUMBER INDICATES OPEN TERMINAL POSITION								STATUS	COMMENTS	OPTIONAL ATTATCHMENTS SOLD SEPERATELY			
		HOUSING KEY/COLOR	GROMMET CAP	PLR	MAT SEAL	1	2	3	4	5	6	7	8			BACKSHELL WITH RIBS	BACKSHELL WITHOUT RIBS	90˚ ADAPTOR WITH RIBS	90˚ ADAPTOR WITHOUT RIBS
KEY A, BLACK, WITH CLIPSLOT	160011-4001	A-BLK-CLIP	GCO	PLR-1	M-R									PLANNED OBSOLECSENCE		34950-0811	34950-0821	34951-0831	34951-0841
KEY B, LIGHT GRAY, WITH CLIPSLOT	160011-4002	B-LG-CLIP	GCO	PLR-1	M-R									PLANNED OBSOLECSENCE		34950-0811	34950-0821	34951-0831	34951-0841
KEY C, DARK GRAY, WITH CLIPSLOT	160011-4003	C-DG-CLIP	GCO	PLR-1	M-R									PLANNED OBSOLECSENCE		34950-0811	34950-0821	34951-0831	34951-0841
KEY D, STONE GRAY, WITH CLIPSLOT	160011-4004	D-SG-CLIP	GCO	PLR-1	M-R									PLANNED OBSOLECSENCE		34950-0811	34950-0821	34951-0831	34951-0841
KEY A, BLACK, WITH CLIPSLOT	160011-4007	A-BLK-CLIP	GCP	PLR-1	M-R	1	2	3	4	5	6	7	8	PLANNED OBSOLECSENCE		34950-0811	34950-0821	34951-0831	34951-0841
KEY B, LIGHT GRAY, WITH CLIPSLOT	160011-4008	B-LG-CLIP	GCP	PLR-1	M-R	1	2	3	4	5	6	7	8	PLANNED OBSOLECSENCE		34950-0811	34950-0821	34951-0831	34951-0841
KEY C, DARK GRAY, WITH CLIPSLOT	160011-4009	C-DG-CLIP	GCP	PLR-1	M-R	1	2	3	4	5	6	7	8	PLANNED OBSOLECSENCE		34950-0811	34950-0821	34951-0831	34951-0841
KEY D, STONE GRAY, WITH CLIPSLOT	160011-4010	D-SG-CLIP	GCP	PLR-1	M-R	1	2	3	4	5	6	7	8	PLANNED OBSOLECSENCE		34950-0811	34950-0821	34951-0831	34951-0841
KEY A, BLACK, WITH CLIPSLOT	160011-4013	A-BLK-CLIP	GCP	PLR-1	M-R				4	5				PLANNED OBSOLECSENCE		34950-0811	34950-0821	34951-0831	34951-0841
KEY A, BLACK, WITH CLIPSLOT	160011-4014	A-BLK-CLIP	GCP	PLR-1	M-R					5	6		8	PLANNED OBSOLECSENCE		34950-0811	34950-0821	34951-0831	34951-0841
KEY A, BLACK, WITH CLIPSLOT	160011-4015	A-BLK-CLIP	GCP	PLR-1	M-R				4	5			8	SALEABLE		34950-0811	34950-0821	34951-0831	34951-0841
KEY A, BLACK, WITH CLIPSLOT	160121-4801	A-BLK-CLIP	GCO	PLR-3	M-B									OK TO TOOL		34950-0811	34950-0821	34951-0831	34951-0841
KEY B, LIGHT GRAY, WITH CLIPSLOT	160121-4802	B-LG-CLIP	GCO	PLR-3	M-B									OK TO TOOL		34950-0811	34950-0821	34951-0831	34951-0841
KEY A, BLACK, WITH CLIPSLOT	160121-4811	A-BLK-CLIP	GCP	PLR-3	M-B				4	5				OK TO TOOL		34950-0811	34950-0821	34951-0831	34951-0841
KEY A, BLACK, WITH CLIPSLOT	160121-4832	A-BLK-CLIP	GCP	PLR-3	M-B					5	6		8	OK TO TOOL		34950-0811	34950-0821	34951-0831	34951-0841
KEY A, BLACK, WITH CLIPSLOT	160121-4834	A-BLK-CLIP	GCP	PLR-3	M-B	1	2	3	4	5	6	7	8	OK TO TOOL		34950-0811	34950-0821	34951-0831	34951-0841
KEY B, LIGHT GRAY, WITH CLIPSLOT	160121-4847	B-LG-CLIP	GCP	PLR-3	M-B	1	2	3	4	5	6	7	8	OK TO TOOL		34950-0811	34950-0821	34951-0831	34951-0841
KEY C, DARK GRAY, WITH CLIPSLOT	160121-4852	C-DG-CLIP	GCO	PLR-3	M-B									OK TO TOOL		34950-0811	34950-0821	34951-0831	34951-0841
KEY D, STONE GRAY, WITH CLIPSLOT	160121-4853	D-SG-CLIP	GCO	PLR-3	M-B									OK TO TOOL		34950-0811	34950-0821	34951-0831	34951-0841
KEY A, BLACK, WITH CLIPSLOT	160121-4854	A-BLK-CLIP	GCP	PLR-3	M-B				4	5			8	OK TO TOOL		34950-0811	34950-0821	34951-0831	34951-0841

molex

MX150 GEN 2 BLADE 2X6 SEALED ASSEMBLY MAT SEAL
BOM AND PIN OUT SHEET

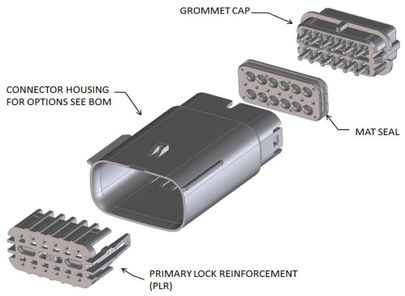

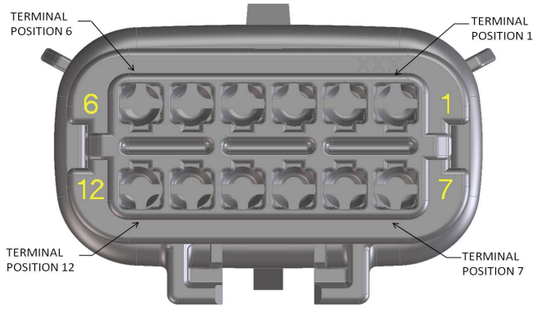

ABBREVIATION	DESCRIPTION	COLOR	MATERIAL
A-BLK-CLIP	HOUSING KEYING OPTION A WITH CLIPSLOT	BLACK	SPS/NYLON GF20
B-LG-CLIP	HOUSING KEYING OPTION B WITH CLIPSLOT	LIGHT GRAY	SPS/NYLON GF20
C-DG-CLIP	HOUSING KEYING OPTION C WITH CLIPSLOT	DARK GRAY	SPS/NYLON GF20
D-SG-CLIP	HOUSING KEYING OPTION D WITH CLIPSLOT	STONE GRAY	SPS/NYLON GF20
GCP	GROMMET CAP (PLUGGED)	BLACK	SPS/NYLON GF20
PLR-1	PLR-1	NATURAL	SPS/NYLON GF20
PLR-3	PLR-3	NATURAL	SPS/NYLON GF20
M-R	MAT SEAL	RUST RED	INHERENTLY LUBRICATED SILICONE
M-B	MAT SEAL	ROYAL BLUE	INHERENTLY LUBRICATED SILICONE

FOR ADDITIONAL INFORMATION SEE SD-160011-0001

ASSEMBLY DESCRIPTION	ASSEMBLY PART NUMBER	COMPONENT				BLOCKED TERMINALS												STATUS	COMMENTS	OPTIONAL ATTATCHMENTS SOLD SEPERATELY	
		THE PRESENCE OF AN ABBREVIATION INDICATES THE PRESENCE OF THAT COMPONENT.				CAVITY WITH A NUMBER INDICATES BLOCKED TERMINAL POSITION CAVITY WITHOUT A NUMBER INDICATES OPEN TERMINAL POSITION															
		HOUSING KEY/COLOR	GROMMET CAP	PLR	MAT SEAL	1	2	3	4	5	6	7	8	9	10	11	12			BACKSHELL WITH RIBS	BACKSHELL WITHOUT RIBS
KEY A, BLACK, WITH CLIPSLOT	160011-6001	A-BLK-CLIP	GCP	PLR-1	M-R													PLANNED OBSOLESCENCE		34950-1210	34950-1220
KEY B, LIGHT GRAY, WITH CLIPSLOT	160011-6002	B-LG-CLIP	GCP	PLR-1	M-R													PLANNED OBSOLESCENCE		34950-1210	34950-1220
KEY C, DARK GRAY, WITH CLIPSLOT	160011-6003	C-DG-CLIP	GCP	PLR-1	M-R													PLANNED OBSOLESCENCE		34950-1210	34950-1220
KEY D, STONE GRAY, WITH CLIPSLOT	160011-6004	D-SG-CLIP	GCP	PLR-1	M-R													PLANNED OBSOLESCENCE		34950-1210	34950-1220
KEY A, BLACK, WITH CLIPSLOT	160011-6007	A-BLK-CLIP	GCP	PLR-1	M-R	1	2	3	4	5	6	7	8	9	10	11	12	PLANNED OBSOLESCENCE		34950-1210	34950-1220
KEY B, LIGHT GRAY, WITH CLIPSLOT	160011-6008	B-LG-CLIP	GCP	PLR-1	M-R	1	2	3	4	5	6	7	8	9	10	11	12	PLANNED OBSOLESCENCE		34950-1210	34950-1220
KEY C, DARK GRAY, WITH CLIPSLOT	160011-6009	C-DG-CLIP	GCP	PLR-1	M-R	1	2	3	4	5	6	7	8	9	10	11	12	PLANNED OBSOLESCENCE		34950-1210	34950-1220
KEY D, STONE GRAY, WITH CLIPSLOT	160011-6010	D-SG-CLIP	GCP	PLR-1	M-R	1	2	3	4	5	6	7	8	9	10	11	12	PLANNED OBSOLESCENSE		34950-1210	34950-1220
KEY A, BLACK, WITH CLIPSLOT	160121-6201	A-BLK-CLIP	GCP	PLR-3	M-B													OK TO TOOL		34950-1210	34950-1220
KEY B, LIGHT GRAY, WITH CLIPSLOT	160121-6202	B-LG-CLIP	GCP	PLR-3	M-B													OK TO TOOL		34950-1210	34950-1220
KEY A, BLACK, WITH CLIPSLOT	160121-6227	A-BLK-CLIP	GCP	PLR-3	M-B	1	2	3	4	5	6	7	8	9	10	11	12	OK TO TOOL		34950-1210	34950-1220
KEY B, LIGHT GRAY, WITH CLIPSLOT	160121-6228	B-LG-CLIP	GCP	PLR-3	M-B	1	2	3	4	5	6	7	8	9	10	11	12	OK TO TOOL		34950-1210	34950-1220
KEY C, DARK GRAY, WITH CLIPSLOT	160121-6261	C-DG-CLIP	GCP	PLR-3	M-B													OK TO TOOL		34950-1210	34950-1220
KEY D, STONE GRAY, WITH CLIPSLOT	160121-6262	D-SG-CLIP	GCP	PLR-3	M-B													OK TO TOOL		34950-1210	34950-1220
KEY C, DARK GRAY, WITH CLIPSLOT	160121-6263	C-DG-CLIP	GCP	PLR-3	M-B	1	2	3	4	5	6	7	8	9	10	11	12	OK TO TOOL		34950-1210	34950-1220
KEY D, STONE GRAY, WITH CLIPSLOT	160121-6264	D-SG-CLIP	GCP	PLR-3	M-B	1	2	3	4	5	6	7	8	9	10	11	12	OK TO TOOL		34950-1210	34950-1220

molex

MX150 GEN 2 BLADE 2X10 SEALED ASSEMBLY MAT SEAL
BOM AND PIN OUT SHEET

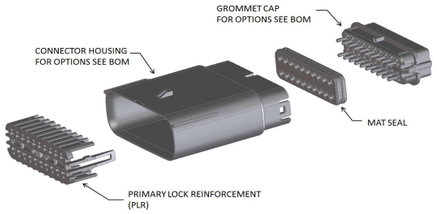

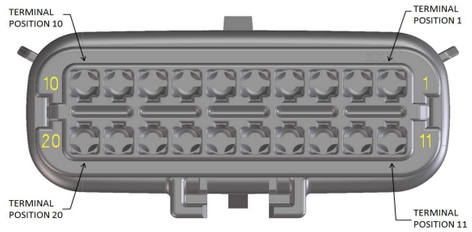

ABBREVIATION	DESCRIPTION	COLOR	MATERIAL
A-BLK-CLIP	HOUSING KEYING OPTION A WITH CLIPSLOT	BLACK	SPS/NYLON GF20
B-LG-CLIP	HOUSING KEYING OPTION B WITH CLIPSLOT	LIGHT GRAY	SPS/NYLON GF20
C-DG-CLIP	HOUSING KEYING OPTION C WITH CLIPSLOT	DARK GRAY	SPS/NYLON GF20
D-SG-CLIP	HOUSING KEYING OPTION D WITH CLIPSLOT	STONE GRAY	SPS/NYLON GF20
GCP	GROMMET CAP (PLUGGED)	BLACK	SPS/NYLON GF20
GCO	GROMMET CAP (OPEN)	BLACK	SPS/NYLON GF20
PLR-3	PLR-3	NATURAL	SPS/NYLON GF20
M	MAT SEAL	LIGHT BLUE	INHERENTLY LUBRICATED SILICONE

FOR ADDITIONAL INFORMATION SEE SD-160011-0001

ASSEMBLY DESCRIPTION	ASSEMBLY PART NUMBER	COMPONENT				BLOCKED TERMINALS																				STATUS	COMMENTS	OPTIONAL ATTATCHMENTS SOLD SEPERATELY			
		THE PRESENCE OF AN ABBREVIATION INDICATES THE PRESENCE OF THAT COMPONENT.				CAVITY WITH A NUMBER INDICATES BLOCKED TERMINAL POSITION CAVITY WITHOUT A NUMBER INDICATES OPEN TERMINAL POSITION																									
		HOUSING KEY/COLOR	GROMMET CAP	PLR	MAT SEAL	1	2	3	4	5	6	7	8	9	10	11	12	13	14	15	16	17	18	19	20			BACKSHELL WITH RIBS	BACKSHELL WITHOUT RIBS	90˚ ADAPTOR WITH RIBS	90˚ ADAPTOR WITHOUT RIBS
KEY A, BLACK, WITH CLIPSLOT	160121-2101	A-BLK-CLIP	GCO	PLR-3	M																					SALEABLE		34950-2011	34950-2021	34951-1631	34951-1641
KEY B, LIGHT GRAY, WITH CLIPSLOT	160121-2102	B-LG-CLIP	GCO	PLR-3	M																					SALEABLE		34950-2011	34950-2021	34951-1631	34951-1641
KEY A, BLACK, WITH CLIPSLOT	160121-2106	A-BLK-CLIP	GCP	PLR-3	M																				20	SALEABLE		34950-2011	34950-2021	34951-1631	34951-1641
KEY A, BLACK, WITH CLIPSLOT	160121-2107	A-BLK-CLIP	GCP	PLR-3	M											11										SALEABLE		34950-2011	34950-2021	34951-1631	34951-1641
KEY A, BLACK, WITH CLIPSLOT	160121-2108	A-BLK-CLIP	GCP	PLR-3	M				4	5	6	7							14	15	16	17				SALEABLE		34950-2011	34950-2021	34951-1631	34951-1641
KEY A, BLACK, WITH CLIPSLOT	160121-2109	A-BLK-CLIP	GCP	PLR-3	M							7									16					SALEABLE		34950-2011	34950-2021	34951-1631	34951-1641
KEY A, BLACK, WITH CLIPSLOT	160121-2122	A-BLK-CLIP	GCP	PLR-3	M			3	4						10				14			17		19		SALEABLE		34950-2011	34950-2021	34951-1631	34951-1641
KEY A, BLACK, WITH CLIPSLOT	160121-2125	A-BLK-CLIP	GCP	PLR-3	M										10				14			17		19		SALEABLE		34950-2011	34950-2021	34951-1631	34951-1641
KEY A, BLACK, WITH CLIPSLOT	160121-2126	A-BLK-CLIP	GCP	PLR-3	M				4	5					10				14	15		17		19		SALEABLE		34950-2011	34950-2021	34951-1631	34951-1641
KEY A, BLACK, WITH CLIPSLOT	160121-2127	A-BLK-CLIP	GCP	PLR-3	M				4	5					10				14	15		17	18	19		SALEABLE		34950-2011	34950-2021	34951-1631	34951-1641
KEY A, BLACK, WITH CLIPSLOT	160121-2128	A-BLK-CLIP	GCP	PLR-3	M	1		3	4	5	6	7	8	9	10	11		13	14	15	16	17	18	19	20	SALEABLE		34950-2011	34950-2021	34951-1631	34951-1641
KEY A, BLACK, WITH CLIPSLOT	160121-2129	A-BLK-CLIP	GCP	PLR-3	M				4	5	6	7									16	17				SALEABLE		34950-2011	34950-2021	34951-1631	34951-1641
KEY A, BLACK, WITH CLIPSLOT	160121-2130	A-BLK-CLIP	GCP	PLR-3	M			3	4	5								13	14	15			18	19		SALEABLE		34950-2011	34950-2021	34951-1631	34951-1641
KEY A, BLACK, WITH CLIPSLOT	160121-2131	A-BLK-CLIP	GCP	PLR-3	M				4			7									16					SALEABLE		34950-2011	34950-2021	34951-1631	34951-1641
KEY A, BLACK, WITH CLIPSLOT	160121-2147	A-BLK-CLIP	GCP	PLR-3	M			3	4	5					10			13	14	15		17	18	19		SALEABLE		34950-2011	34950-2021	34951-1631	34951-1641
KEY A, BLACK, WITH CLIPSLOT	160121-2133	A-BLK-CLIP	GCP	PLR-3	M										10							17		19		SALEABLE		34950-2011	34950-2021	34951-1631	34951-1641
KEY A, BLACK, WITH CLIPSLOT	160121-2134	A-BLK-CLIP	GCP	PLR-3	M																	17	18	19	20	SALEABLE		34950-2011	34950-2021	34951-1631	34951-1641
KEY A, BLACK, WITH CLIPSLOT	160121-2135	A-BLK-CLIP	GCP	PLR-3	M																16	17	18	19	20	SALEABLE		34950-2011	34950-2021	34951-1631	34951-1641
KEY A, BLACK, WITH CLIPSLOT	160121-2136	A-BLK-CLIP	GCP	PLR-3	M							7		9								17	18	19	20	SALEABLE		34950-2011	34950-2021	34951-1631	34951-1641
KEY A, BLACK, WITH CLIPSLOT	160121-2137	A-BLK-CLIP	GCP	PLR-3	M							7		9												SALEABLE		34950-2011	34950-2021	34951-1631	34951-1641
KEY A, BLACK, WITH CLIPSLOT	160121-2138	A-BLK-CLIP	GCP	PLR-3	M	1	2	3	4	5	6	7	8	9	10		12					17		19		SALEABLE		34950-2011	34950-2021	34951-1631	34951-1641
KEY A, BLACK, WITH CLIPSLOT	160121-2139	A-BLK-CLIP	GCP	PLR-3	M	1	2	3	4	5	6	7	8		10							17		19		SALEABLE		34950-2011	34950-2021	34951-1631	34951-1641
KEY A, BLACK, WITH CLIPSLOT	160121-2140	A-BLK-CLIP	GCP	PLR-3	M							7										17			20	SALEABLE		34950-2011	34950-2021	34951-1631	34951-1641
KEY A, BLACK, WITH CLIPSLOT	160121-2142	A-BLK-CLIP	GCP	PLR-3	M										10				14			17	18	19		SALEABLE		34950-2011	34950-2021	34951-1631	34951-1641
KEY A, BLACK, WITH CLIPSLOT	160121-2132	A-BLK-CLIP	GCP	PLR-3	M			3	4	5								13		15			18	19		SALEABLE		34950-2011	34950-2021	34951-1631	34951-1641
KEY B, LIGHT GRAY, WITH CLIPSLOT	160121-2156	B-LG-CLIP	GCP	PLR-3	M			3		5				9	10											SALEABLE		34950-2011	34950-2021	34951-1631	34951-1641
KEY B, LIGHT GRAY, WITH CLIPSLOT	160121-2157	B-LG-CLIP	GCP	PLR-3	M			3	4	5				9	10	11	12	13	14	15	16	17	18	19	20	SALEABLE		34950-2011	34950-2021	34951-1631	34951-1641
KEY B, LIGHT GRAY, WITH CLIPSLOT	160121-2158	B-LG-CLIP	GCP	PLR-3	M			3		5				9	10	11	12	13	14							SALEABLE		34950-2011	34950-2021	34951-1631	34951-1641
KEY A, BLACK, WITH CLIPSLOT	160121-2168	A-BLK-CLIP	GCP	PLR-3	M			3	4	5		7						13		15			18	19		SALEABLE		34950-2011	34950-2021	34951-1631	34951-1641
KEY A, BLACK, WITH CLIPSLOT	160121-2169	A-BLK-CLIP	GCP	PLR-3	M							7			10				14			17	18	19		SALEABLE		34950-2011	34950-2021	34951-1631	34951-1641
KEY A, BLACK, WITH CLIPSLOT	160121-2171	A-BLK-CLIP	GCP	PLR-3	M											11						17		19		SALEABLE		34950-2011	34950-2021	34951-1631	34951-1641
KEY A, BLACK, WITH CLIPSLOT	160121-2172	A-BLK-CLIP	GCP	PLR-3	M	1	2	3	4	5	6	7	8			11						17		19		SALEABLE		34950-2011	34950-2021	34951-1631	34951-1641
KEY A, BLACK, WITH CLIPSLOT	160121-2173	A-BLK-CLIP	GCP	PLR-3	M								8							15						SALEABLE		34950-2011	34950-2021	34951-1631	34951-1641
KEY A, BLACK, WITH CLIPSLOT	160121-2177	A-BLK-CLIP	GCP	PLR-3	M													13			16			19	20	SALEABLE		34950-2011	34950-2021	34951-1631	34951-1641
KEY A, BLACK, WITH CLIPSLOT	160121-2178	A-BLK-CLIP	GCP	PLR-3	M				4										14					19		SALEABLE		34950-2011	34950-2021	34951-1631	34951-1641
KEY A, BLACK, WITH CLIPSLOT	160121-2179	A-BLK-CLIP	GCP	PLR-3	M				4	5	6	7	8	9	10				14	15	16	17	18	19	20	SALEABLE		34950-2011	34950-2021	34951-1631	34951-1641
KEY A, BLACK, WITH CLIPSLOT	160121-2185	A-BLK-CLIP	GCP	PLR-3	M	1																		19		SALEABLE		34950-2011	34950-2021	34951-1631	34951-1641
KEY A, BLACK, WITH CLIPSLOT	160121-2187	A-BLK-CLIP	GCP	PLR-3	M	1											12	13						19		SALEABLE		34950-2011	34950-2021	34951-1631	34951-1641
KEY A, BLACK, WITH CLIPSLOT	160121-2188	A-BLK-CLIP	GCP	PLR-3	M	1				5	6	7	8				12	13		15				19		SALEABLE		34950-2011	34950-2021	34951-1631	34951-1641
KEY A, BLACK, WITH CLIPSLOT	160121-2189	A-BLK-CLIP	GCP	PLR-3	M	1	2	3	4	5	6	7	8	9			12	13	14	15	16			19		SALEABLE		34950-2011	34950-2021	34951-1631	34951-1641
KEY A, BLACK, WITH CLIPSLOT	160121-2190	A-BLK-CLIP	GCP	PLR-3	M	1	2	3	4	5	6	7	8	9	10	11	12	13	14	15	16			19	20	SALEABLE		34950-2011	34950-2021	34951-1631	34951-1641
KEY A, BLACK, WITH CLIPSLOT	160121-2191	A-BLK-CLIP	GCP	PLR-3	M	1	2	3	4	5	6		8		10			13			16			19	20	SALEABLE		34950-2011	34950-2021	34951-1631	34951-1641
KEY A, BLACK, WITH CLIPSLOT	160121-2192	A-BLK-CLIP	GCP	PLR-3	M		2						8					13			16			19	20	SALEABLE		34950-2011	34950-2021	34951-1631	34951-1641
KEY A, BLACK, WITH CLIPSLOT	160121-2193	A-BLK-CLIP	GCP	PLR-3	M	1	2	3	4	5	6	7	8	9	10			13			16			19	20	SALEABLE		34950-2011	34950-2021	34951-1631	34951-1641
KEY A, BLACK, WITH CLIPSLOT	160121-2194	A-BLK-CLIP	GCP	PLR-3	M	1	2	3	4	5	6		8	9	10			13			16			19	20	SALEABLE		34950-2011	34950-2021	34951-1631	34951-1641
KEY A, BLACK, WITH CLIPSLOT	160121-2195	A-BLK-CLIP	GCP	PLR-3	M		2											13			16			19	20	SALEABLE		34950-2011	34950-2021	34951-1631	34951-1641
KEY B, LIGHT GRAY, WITH CLIPSLOT	160121-2196	B-LG-CLIP	GCP	PLR-3	M	1	2	3	4	5	6	7	8			11						17		19		SALEABLE		34950-2011	34950-2021	34951-1631	34951-1641
KEY B, LIGHT GRAY, WITH CLIPSLOT	160121-2197	B-LG-CLIP	GCP	PLR-3	M											11						17		19		SALEABLE		34950-2011	34950-2021	34951-1631	34951-1641
KEY A, BLACK, WITH CLIPSLOT	160121-2198	A-BLK-CLIP	GCP	PLR-3	M	1	2	3				7		9							16			19	20	SALEABLE		34950-2011	34950-2021	34951-1631	34951-1641
KEY A, BLACK, WITH CLIPSLOT	160121-2199	A-BLK-CLIP	GCP	PLR-3	M	1	2	3	4	5		7	8	9				13	14	15	16			19	20	SALEABLE		34950-2011	34950-2021	34951-1631	34951-1641
KEY A, BLACK, WITH CLIPSLOT	160121-2204	A-BLK-CLIP	GCP	PLR-3	M				4	5	6						12			15	16	17	18	19		SALEABLE		34950-2011	34950-2021	34951-1631	34951-1641
KEY A, BLACK, WITH CLIPSLOT	160121-2203	A-BLK-CLIP	GCP	PLR-3	M	1	2	3						9										19	20	SALEABLE		34950-2011	34950-2021	34951-1631	34951-1641
KEY A, BLACK, WITH CLIPSLOT	160121-2202	A-BLK-CLIP	GCP	PLR-3	M		2	3	4	5			8	9							16				20	SALEABLE		34950-2011	34950-2021	34951-1631	34951-1641
KEY A, BLACK, WITH CLIPSLOT	160121-2052	A-BLK-CLIP	GCP	PLR-3	M	1	2	3	4	5	6	7	8	9	10	11	12	13	14	15	16	17	18	19	20	SALEABLE		34950-2011	34950-2021	34951-1631	34951-1641
KEY A, BLACK, WITH CLIPSLOT	160121-2210	A-BLK-CLIP	GCP	PLR-3	M									9	10	11	12				16				20	SALEABLE		34950-2011	34950-2021	34951-1631	34951-1641
KEY A, BLACK, WITH CLIPSLOT	160121-2214	A-BLK-CLIP	GCP	PLR-3	M																16					SALEABLE		34950-2011	34950-2021	34951-1631	34951-1641
KEY A, BLACK, WITH CLIPSLOT	160121-2215	A-BLK-CLIP	GCP	PLR-3	M		2						8		10							17		19		SALEABLE		34950-2011	34950-2021	34951-1631	34951-1641
KEY A, BLACK, WITH CLIPSLOT	160121-2216	A-BLK-CLIP	GCP	PLR-3	M																16				20	SALEABLE		34950-2011	34950-2021	34951-1631	34951-1641
KEY A, BLACK, WITH CLIPSLOT	160121-2218	A-BLK-CLIP	GCP	PLR-3	M	1	2	3	4	5	6													19	20	SALEABLE		34950-2011	34950-2021	34951-1631	34951-1641
KEY A, BLACK, WITH CLIPSLOT	160121-2219	A-BLK-CLIP	GCP	PLR-3	M						6														20	SALEABLE		34950-2011	34950-2021	34951-1631	34951-1641
KEY A, BLACK, WITH CLIPSLOT	160121-2222	A-BLK-CLIP	GCP	PLR-3	M	1	2	3						9							16				20	SALEABLE		34950-2011	34950-2021	34951-1631	34951-1641
KEY A, BLACK, WITH CLIPSLOT	160121-2224	A-BLK-CLIP	GCP	PLR-3	M										10				14	15		17		19		SALEABLE		34950-2011	34950-2021	34951-1631	34951-1641
KEY A, BLACK, WITH CLIPSLOT	160121-2225	A-BLK-CLIP	GCP	PLR-3	M	1	2	3	4	5	6		8		10							17	18	19	20	SALEABLE		34950-2011	34950-2021	34951-1631	34951-1641
KEY A, BLACK, WITH CLIPSLOT	160121-2227	A-BLK-CLIP	GCP	PLR-3	M			3							10			13	14			17	18	19	20	SALEABLE		34950-2011	34950-2021	34951-1631	34951-1641
KEY A, BLACK, WITH CLIPSLOT	160121-2228	A-BLK-CLIP	GCP	PLR-3	M			3	4	5	6	7	8	9	10			13	14			17	18	19	20	SALEABLE		34950-2011	34950-2021	34951-1631	34951-1641
KEY A, BLACK, WITH CLIPSLOT	160121-2229	A-BLK-CLIP	GCP	PLR-3	M			3	4	5	6	7	8	9	10			13	14			17	18	19		SALEABLE		34950-2011	34950-2021	34951-1631	34951-1641
KEY A, BLACK, WITH CLIPSLOT	160121-2230	A-BLK-CLIP	GCP	PLR-3	M			3							10			13	14			17	18	19		SALEABLE		34950-2011	34950-2021	34951-1631	34951-1641
KEY A, BLACK, WITH CLIPSLOT	160121-2231	A-BLK-CLIP	GCP	PLR-3	M	1	2	3	4	5	6		8		10								18		20	SALEABLE		34950-2011	34950-2021	34951-1631	34951-1641
KEY A, BLACK, WITH CLIPSLOT	160121-2232	A-BLK-CLIP	GCP	PLR-3	M																		18		20	SALEABLE		34950-2011	34950-2021	34951-1631	34951-1641
KEY B, LIGHT GRAY, WITH CLIPSLOT	160121-2234	B-LG-CLIP	GCP	PLR-3	M											11	12	13				17		19		SALEABLE		34950-2011	34950-2021	34951-1631	34951-1641
KEY B, LIGHT GRAY, WITH CLIPSLOT	160121-2235	B-LG-CLIP	GCP	PLR-3	M		2	3									12	13						19		SALEABLE		34950-2011	34950-2021	34951-1631	34951-1641
KEY A, BLACK, WITH CLIPSLOT	160121-2236	A-BLK-CLIP	GCP	PLR-3	M			3	4		6	7	8	9			12	13	14	15	16	17				SALEABLE		34950-2011	34950-2021	34951-1631	34951-1641
KEY A, BLACK, WITH CLIPSLOT	160121-2237	A-BLK-CLIP	GCP	PLR-3	M			3	4	5	6	7											18	19		SALEABLE		34950-2011	34950-2021	34951-1631	34951-1641
KEY A, BLACK, WITH CLIPSLOT	160121-2238	A-BLK-CLIP	GCP	PLR-3	M					5													18	19		SALEABLE		34950-2011	34950-2021	34951-1631	34951-1641
KEY A, BLACK, WITH CLIPSLOT	160121-2239	A-BLK-CLIP	GCP	PLR-3	M			3	4	5	6	7			10								18	19	20	SALEABLE		34950-2011	34950-2021	34951-1631	34951-1641
KEY A, BLACK, WITH CLIPSLOT	160121-2240	A-BLK-CLIP	GCP	PLR-3	M					5					10								18	19	20	SALEABLE		34950-2011	34950-2021	34951-1631	34951-1641
KEY A, BLACK, WITH CLIPSLOT	160121-2241	A-BLK-CLIP	GCP	PLR-3	M			3	4		6	7	8	9	10		12	13	14	15	16	17			20	SALEABLE		34950-2011	34950-2021	34951-1631	34951-1641
KEY A, BLACK, WITH CLIPSLOT	160121-2242	A-BLK-CLIP	GCP	PLR-3	M	1	2	3	4	5	6		8		10											SALEABLE		34950-2011	34950-2021	34951-1631	34951-1641
KEY A, BLACK, WITH CLIPSLOT	160121-2243	A-BLK-CLIP	GCP	PLR-3	M	1	2	3					8	9			12	13	14	15	16	17	18	19	20	SALEABLE		34950-2011	34950-2021	34951-1631	34951-1641
KEY A, BLACK, WITH CLIPSLOT	160121-2244	A-BLK-CLIP	GCP	PLR-3	M	1	2	3				7	8	9	10		12	13	14	15	16	17	18	19	20	SALEABLE		34950-2011	34950-2021	34951-1631	34951-1641
KEY A, BLACK, WITH CLIPSLOT	160121-2245	A-BLK-CLIP	GCP	PLR-3	M		2	3				7	8	9	10		12	13	14	15	16	17	18		20	SALEABLE		34950-2011	34950-2021	34951-1631	34951-1641
KEY A, BLACK, WITH CLIPSLOT	160121-2246	A-BLK-CLIP	GCP	PLR-3	M	1	2	3	4	5			8	9			12	13	14	15	16	17	18	19	20	SALEABLE		34950-2011	34950-2021	34951-1631	34951-1641
KEY A, BLACK, WITH CLIPSLOT	160121-2247	A-BLK-CLIP	GCP	PLR-3	M	1	2	3	4	5		7	8	9	10		12	13	14	15	16	17	18	19	20	SALEABLE		34950-2011	34950-2021	34951-1631	34951-1641
KEY A, BLACK, WITH CLIPSLOT	160121-2253	A-BLK-CLIP	GCP	PLR-3	M	1	2	3						9	10	11	12				16				20	SALEABLE		34950-2011	34950-2021	34951-1631	34951-1641
KEY A, BLACK, WITH CLIPSLOT	160121-2254	A-BLK-CLIP	GCP	PLR-3	M	1								9	10	11					16			19	20	SALEABLE		34950-2011	34950-2021	34951-1631	34951-1641
KEY A, BLACK, WITH CLIPSLOT	160121-2255	A-BLK-CLIP	GCP	PLR-3	M	1	2	3	4	5		7	8	9							16	17	18	19	20	SALEABLE		34950-2011	34950-2021	34951-1631	34951-1641
KEY A, BLACK, WITH CLIPSLOT	160121-2256	A-BLK-CLIP	GCP	PLR-3	M	1	2	3				7		9				13	14	15	16			19	20	SALEABLE		34950-2011	34950-2021	34951-1631	34951-1641
KEY A, BLACK, WITH CLIPSLOT	160121-2257	A-BLK-CLIP	GCP	PLR-3	M	1	2	3	4	5		7	8	9							16			19	20	SALEABLE		34950-2011	34950-2021	34951-1631	34951-1641
KEY A, BLACK, WITH CLIPSLOT	160121-2258	A-BLK-CLIP	GCP	PLR-3	M	1	2	3				7		9	10	11	12				16			19	20	SALEABLE		34950-2011	34950-2021	34951-1631	34951-1641
KEY A, BLACK, WITH CLIPSLOT	160121-2259	A-BLK-CLIP	GCP	PLR-3	M	1	2	3	4	5	6		8	9							16				20	SALEABLE		34950-2011	34950-2021	34951-1631	34951-1641
KEY A, BLACK, WITH CLIPSLOT	160121-2260	A-BLK-CLIP	GCP	PLR-3	M	1	2	3			6			9	10	11	12	13	14	15	16				20	SALEABLE		34950-2011	34950-2021	34951-1631	34951-1641
KEY A, BLACK, WITH CLIPSLOT	160121-2263	A-BLK-CLIP	GCP	PLR-3	M	1	2	3	4	5	6	7	8		10				14	15		17		19		SALEABLE		34950-2011	34950-2021	34951-1631	34951-1641
KEY B, LIGHT GRAY, WITH CLIPSLOT	160121-2233	B-LG-CLIP	GCP	PLR-3	M	1	2	3	4	5	6	7	8			11	12	13				17		19		SALEABLE		34950-2011	34950-2021	34951-1631	34951-1641
KEY A, BLACK, WITH CLIPSLOT	160121-2266	A-BLK-CLIP	GCP	PLR-3	M			3													16	17	18	19	20	SALEABLE		34950-2011	34950-2021	34951-1631	34951-1641
KEY A, BLACK, WITH CLIPSLOT	160121-2324	A-BLK-CLIP	GCP	PLR-3	M	1	2	3	4	5	6	7	8		10	11			14			17	18	19		SALEABLE		34950-2011	34950-2021	34951-1631	34951-1641
KEY B, LIGHT GRAY, WITH CLIPSLOT	160121-2325	B-LG-CLIP	GCP	PLR-3	M																	17	18	19	20	SALEABLE		34950-2011	34950-2021	34951-1631	34951-1641
KEY A, BLACK, WITH CLIPSLOT	160121-2326	A-BLK-CLIP	GCP	PLR-3	M				4	5	6	7	8	9	10	11	12	13	14	15						SALEABLE		34950-2011	34950-2021	34951-1631	34951-1641
KEY A, BLACK, WITH CLIPSLOT	160121-2327	A-BLK-CLIP	GCP	PLR-3	M					5	6	7	8			11	12	13	14	15						SALEABLE		34950-2011	34950-2021	34951-1631	34951-1641
KEY A, BLACK, WITH CLIPSLOT	160121-2328	A-BLK-CLIP	GCP	PLR-3	M					5	6	7	8			11	12			15						SALEABLE		34950-2011	34950-2021	34951-1631	34951-1641

molex

MX150 GEN 2 BLADE 2X10 SEALED ASSEMBLY MAT SEAL
BOM AND PIN OUT SHEET

ASSEMBLY DESCRIPTION	ASSEMBLY PART NUMBER	COMPONENT				BLOCKED TERMINALS																				STATUS	COMMENTS	OPTIONAL ATTATCHMENTS SOLD SEPERATELY			
		THE PRESENCE OF AN ABBREVIATION INDICATES THE PRESENCE OF THAT COMPONENT.				CAVITY WITH A NUMBER INDICATES BLOCKED TERMINAL POSITION CAVITY WITHOUT A NUMBER INDICATES OPEN TERMINAL POSITION																										
		HOUSING KEY/COLOR	GROMMET CAP	PLR	MAT SEAL	1	2	3	4	5	6	7	8	9	10	11	12	13	14	15	16	17	18	19	20			BACKSHELL WITH RIBS	BACKSHELL WITHOUT RIBS	90˚ ADAPTOR WITH RIBS	90˚ ADAPTOR WITHOUT RIBS
KEY A, BLACK, WITH CLIPSLOT	160121-2329	A-BLK-CLIP	GCP	PLR-3	M					5	6	7	8			11	12									SALEABLE		34950-2011	34950-2021	34951-1631	34951-1641
KEY A, BLACK, WITH CLIPSLOT	160121-2330	A-BLK-CLIP	GCP	PLR-3	M					5	6	7	8	9	10	11	12	13	14	15						SALEABLE		34950-2011	34950-2021	34951-1631	34951-1641
KEY A, BLACK, WITH CLIPSLOT	160121-2331	A-BLK-CLIP	GCP	PLR-3	M					5	6	7	8													SALEABLE		34950-2011	34950-2021	34951-1631	34951-1641
KEY A, BLACK, WITH CLIPSLOT	160121-2332	A-BLK-CLIP	GCP	PLR-3	M					5	6	7											18	19		SALEABLE		34950-2011	34950-2021	34951-1631	34951-1641
KEY A, BLACK, WITH CLIPSLOT	160121-2333	A-BLK-CLIP	GCP	PLR-3	M					5	6	7				11	12	13	14	15			18	19		SALEABLE		34950-2011	34950-2021	34951-1631	34951-1641
KEY A, BLACK, WITH CLIPSLOT	160121-2334	A-BLK-CLIP	GCP	PLR-3	M	1		3	4	5														19		SALEABLE		34950-2011	34950-2021	34951-1631	34951-1641
KEY B, LIGHT GRAY, WITH CLIPSLOT	160121-2335	B-LG-CLIP	GCP	PLR-3	M		2		4															19	20	SALEABLE		34950-2011	34950-2021	34951-1631	34951-1641
KEY A, BLACK, WITH CLIPSLOT	160121-2336	A-BLK-CLIP	GCP	PLR-3	M	1	2	3				7	8		10	11						17	18	19	20	SALEABLE		34950-2011	34950-2021	34951-1631	34951-1641
KEY A, BLACK, WITH CLIPSLOT	160121-2337	A-BLK-CLIP	GCP	PLR-3	M	1		3					8			11						17	18	19	20	SALEABLE		34950-2011	34950-2021	34951-1631	34951-1641
KEY A, BLACK, WITH CLIPSLOT	160121-2338	A-BLK-CLIP	GCP	PLR-3	M		2	3				7			10	11						17	18	19	20	SALEABLE		34950-2011	34950-2021	34951-1631	34951-1641
KEY A, BLACK, WITH CLIPSLOT	160121-2339	A-BLK-CLIP	GCP	PLR-3	M		2					7			10							17	18	19	20	SALEABLE		34950-2011	34950-2021	34951-1631	34951-1641
KEY A, BLACK, WITH CLIPSLOT	160121-2340	A-BLK-CLIP	GCP	PLR-3	M			3								11						17	18	19	20	SALEABLE		34950-2011	34950-2021	34951-1631	34951-1641
KEY A, BLACK, WITH CLIPSLOT	160121-2341	A-BLK-CLIP	GCP	PLR-3	M	1	2	3			6	7	8		10	11						17	18	19	20	SALEABLE		34950-2011	34950-2021	34951-1631	34951-1641
KEY A, BLACK, WITH CLIPSLOT	160121-2342	A-BLK-CLIP	GCP	PLR-3	M		2	3			6	7			10	11						17	18	19	20	SALEABLE		34950-2011	34950-2021	34951-1631	34951-1641
KEY A, BLACK, WITH CLIPSLOT	160121-2343	A-BLK-CLIP	GCP	PLR-3	M		2				6	7			10							17	18	19	20	SALEABLE		34950-2011	34950-2021	34951-1631	34951-1641
KEY A, BLACK, WITH CLIPSLOT	160121-2344	A-BLK-CLIP	GCP	PLR-3	M						6											17	18	19	20	SALEABLE		34950-2011	34950-2021	34951-1631	34951-1641
KEY A, BLACK, WITH CLIPSLOT	160121-2345	A-BLK-CLIP	GCP	PLR-3	M	1	2				6	7	8		10							17	18	19	20	SALEABLE		34950-2011	34950-2021	34951-1631	34951-1641
KEY A, BLACK, WITH CLIPSLOT	160121-2346	A-BLK-CLIP	GCP	PLR-3	M					5	6	7	8	9												SALEABLE		34950-2011	34950-2021	34951-1631	34951-1641
KEY A, BLACK, WITH CLIPSLOT	160121-2347	A-BLK-CLIP	GCP	PLR-3	M		2	3	4	5	6	7	8	9		11		13	14					19	20	SALEABLE		34950-2011	34950-2021	34951-1631	34951-1641
KEY A, BLACK, WITH CLIPSLOT	160121-2348	A-BLK-CLIP	GCP	PLR-3	M				4	5	6	7		9	10	11	12	13	14	15			18	19		SALEABLE		34950-2011	34950-2021	34951-1631	34951-1641
KEY A, BLACK, WITH CLIPSLOT	160121-2349	A-BLK-CLIP	GCP	PLR-3	M				4	5	6	7		9	10	11	12						18	19		SALEABLE		34950-2011	34950-2021	34951-1631	34951-1641
KEY A, BLACK, WITH CLIPSLOT	160121-2350	A-BLK-CLIP	GCP	PLR-3	M					5	6	7				11	12						18	19		SALEABLE		34950-2011	34950-2021	34951-1631	34951-1641
KEY B, LIGHT GRAY, WITH CLIPSLOT	160121-2351	B-LG-CLIP	GCP	PLR-3	M											11	12	13	14	15	16	17	18	19	20	SALEABLE		34950-2011	34950-2021	34951-1631	34951-1641
KEY B, LIGHT GRAY, WITH CLIPSLOT	160121-2352	B-LG-CLIP	GCP	PLR-3	M		2			5			8			11		13	14	15	16	17	18	19	20	SALEABLE		34950-2011	34950-2021	34951-1631	34951-1641
KEY B, LIGHT GRAY, WITH CLIPSLOT	160121-2353	B-LG-CLIP	GCP	PLR-3	M															15				19	20	SALEABLE		34950-2011	34950-2021	34951-1631	34951-1641
KEY B, LIGHT GRAY, WITH CLIPSLOT	160121-2354	B-LG-CLIP	GCP	PLR-3	M																16	17	18	19	20	SALEABLE		34950-2011	34950-2021	34951-1631	34951-1641
KEY B, LIGHT GRAY, WITH CLIPSLOT	160121-2355	B-LG-CLIP	GCP	PLR-3	M		2								10	11	12	13		15	16	17	18	19	20	SALEABLE		34950-2011	34950-2021	34951-1631	34951-1641
KEY A, BLACK, WITH CLIPSLOT	160121-2356	A-BLK-CLIP	GCP	PLR-3	M	1	2											13	14	15			18	19	20	SALEABLE		34950-2011	34950-2021	34951-1631	34951-1641
KEY A, BLACK, WITH CLIPSLOT	160121-2357	A-BLK-CLIP	GCP	PLR-3	M				4	5	6	7	8	9	10	11	12	13	14	15			18	19		SALEABLE		34950-2011	34950-2021	34951-1631	34951-1641
KEY A, BLACK, WITH CLIPSLOT	160121-2358	A-BLK-CLIP	GCP	PLR-3	M					5	6	7	8			11	12	13	14	15			18	19		SALEABLE		34950-2011	34950-2021	34951-1631	34951-1641
KEY A, BLACK, WITH CLIPSLOT	160121-2359	A-BLK-CLIP	GCP	PLR-3	M				4	5	6	7	8	9	10			13	14	15			18	19		SALEABLE		34950-2011	34950-2021	34951-1631	34951-1641
KEY A, BLACK, WITH CLIPSLOT	160121-2360	A-BLK-CLIP	GCP	PLR-3	M					5	6	7	8					13	14	15			18	19		SALEABLE		34950-2011	34950-2021	34951-1631	34951-1641
KEY A, BLACK, WITH CLIPSLOT	160121-2361	A-BLK-CLIP	GCP	PLR-3	M				4			7	8	9	10	11	12	13	14				18	19		SALEABLE		34950-2011	34950-2021	34951-1631	34951-1641
KEY A, BLACK, WITH CLIPSLOT	160121-2362	A-BLK-CLIP	GCP	PLR-3	M							7	8			11	12	13	14				18	19		SALEABLE		34950-2011	34950-2021	34951-1631	34951-1641
KEY A, BLACK, WITH CLIPSLOT	160121-2363	A-BLK-CLIP	GCP	PLR-3	M				4			7	8	9	10			13	14				18	19		SALEABLE		34950-2011	34950-2021	34951-1631	34951-1641
KEY A, BLACK, WITH CLIPSLOT	160121-2364	A-BLK-CLIP	GCP	PLR-3	M							7	8					13	14				18	19		SALEABLE		34950-2011	34950-2021	34951-1631	34951-1641
KEY A, BLACK, WITH CLIPSLOT	160121-2365	A-BLK-CLIP	GCP	PLR-3	M				4	5	6	7	8	9	10	11	12						18	19		SALEABLE		34950-2011	34950-2021	34951-1631	34951-1641
KEY A, BLACK, WITH CLIPSLOT	160121-2366	A-BLK-CLIP	GCP	PLR-3	M					5	6	7	8			11	12						18	19		SALEABLE		34950-2011	34950-2021	34951-1631	34951-1641
KEY A, BLACK, WITH CLIPSLOT	160121-2367	A-BLK-CLIP	GCP	PLR-3	M				4	5	6	7	8	9	10								18	19		SALEABLE		34950-2011	34950-2021	34951-1631	34951-1641
KEY A, BLACK, WITH CLIPSLOT	160121-2368	A-BLK-CLIP	GCP	PLR-3	M					5	6	7	8										18	19		SALEABLE		34950-2011	34950-2021	34951-1631	34951-1641
KEY B, LIGHT GRAY, WITH CLIPSLOT	160121-2369	B-LG-CLIP	GCP	PLR-3	M			3								11			14			17		19		SALEABLE		34950-2011	34950-2021	34951-1631	34951-1641
KEY A, BLACK, WITH CLIPSLOT	160121-2370	A-BLK-CLIP	GCP	PLR-3	M								8			11									20	SALEABLE		34950-2011	34950-2021	34951-1631	34951-1641
KEY A, BLACK, WITH CLIPSLOT	160121-2371	A-BLK-CLIP	GCP	PLR-3	M						6	7	8	9		11									20	SALEABLE		34950-2011	34950-2021	34951-1631	34951-1641
KEY A, BLACK, WITH CLIPSLOT	160121-2372	A-BLK-CLIP	GCP	PLR-3	M			3	4		6	7		9	10			13	14		16	17	18	19	20	SALEABLE		34950-2011	34950-2021	34951-1631	34951-1641
KEY B, LIGHT GRAY, WITH CLIPSLOT	160121-2373	B-LG-CLIP	GCP	PLR-3	M					5	6					11	12	13	14	15		17	18		20	SALEABLE		34950-2011	34950-2021	34951-1631	34951-1641
KEY B, LIGHT GRAY, WITH CLIPSLOT	160121-2374	B-LG-CLIP	GCP	PLR-3	M																				20	SALEABLE		34950-2011	34950-2021	34951-1631	34951-1641
KEY B, LIGHT GRAY, WITH CLIPSLOT	160121-2375	B-LG-CLIP	GCP	PLR-3	M														14	15		17	18		20	SALEABLE		34950-2011	34950-2021	34951-1631	34951-1641
KEY B, LIGHT GRAY, WITH CLIPSLOT	160121-2376	B-LG-CLIP	GCP	PLR-3	M																	17	18		20	SALEABLE		34950-2011	34950-2021	34951-1631	34951-1641
KEY A, BLACK, WITH CLIPSLOT	160121-2377	A-BLK-CLIP	GCP	PLR-3	M	1		3			6	7	8		10	11						17	18	19	20	SALEABLE		34950-2011	34950-2021	34951-1631	34951-1641
KEY A, BLACK, WITH CLIPSLOT	160121-2378	A-BLK-CLIP	GCP	PLR-3	M	1		3					8		10	11						17	18	19	20	SALEABLE		34950-2011	34950-2021	34951-1631	34951-1641
KEY A, BLACK, WITH CLIPSLOT	160121-2379	A-BLK-CLIP	GCP	PLR-3	M	1		3	4	5	6	7	8		10	11	12	13				17	18	19	20	SALEABLE		34950-2011	34950-2021	34951-1631	34951-1641
KEY A, BLACK, WITH CLIPSLOT	160121-2380	A-BLK-CLIP	GCP	PLR-3	M	1		3	4	5			8		10	11	12	13				17	18	19	20	SALEABLE		34950-2011	34950-2021	34951-1631	34951-1641
KEY A, BLACK, WITH CLIPSLOT	160121-2381	A-BLK-CLIP	GCP	PLR-3	M	1		3	4	5	6	7			10	11	12	13				17	18	19	20	SALEABLE		34950-2011	34950-2021	34951-1631	34951-1641
KEY A, BLACK, WITH CLIPSLOT	160121-2382	A-BLK-CLIP	GCP	PLR-3	M	1		3	4	5					10	11	12	13				17	18	19	20	SALEABLE		34950-2011	34950-2021	34951-1631	34951-1641
KEY A, BLACK, WITH CLIPSLOT	160121-2383	A-BLK-CLIP	GCP	PLR-3	M	1	2	3						9												SALEABLE		34950-2011	34950-2021	34951-1631	34951-1641
KEY A, BLACK, WITH CLIPSLOT	160121-2384	A-BLK-CLIP	GCP	PLR-3	M			3						9												SALEABLE		34950-2011	34950-2021	34951-1631	34951-1641
KEY A, BLACK, WITH CLIPSLOT	160121-2385	A-BLK-CLIP	GCP	PLR-3	M	1		3	4	5	6	7	8		10	11	12					17	18	19	20	SALEABLE		34950-2011	34950-2021	34951-1631	34951-1641
KEY A, BLACK, WITH CLIPSLOT	160121-2386	A-BLK-CLIP	GCP	PLR-3	M	1		3	4	5			8		10	11	12					17	18	19	20	SALEABLE		34950-2011	34950-2021	34951-1631	34951-1641
KEY A, BLACK, WITH CLIPSLOT	160121-2387	A-BLK-CLIP	GCP	PLR-3	M	1		3	4	5	6	7				11	12					17	18			SALEABLE		34950-2011	34950-2021	34951-1631	34951-1641
KEY A, BLACK, WITH CLIPSLOT	160121-2388	A-BLK-CLIP	GCP	PLR-3	M	1		3	4	5						11	12					17	18			SALEABLE		34950-2011	34950-2021	34951-1631	34951-1641
KEY A, BLACK, WITH CLIPSLOT	160121-2389	A-BLK-CLIP	GCP	PLR-3	M	1	2	3	4	5	6		8		10				14	15	16					SALEABLE		34950-2011	34950-2021	34951-1631	34951-1641
KEY A, BLACK, WITH CLIPSLOT	160121-2390	A-BLK-CLIP	GCP	PLR-3	M	1	2	3	4	5	6		8		10						16					SALEABLE		34950-2011	34950-2021	34951-1631	34951-1641
KEY A, BLACK, WITH CLIPSLOT	160121-2391	A-BLK-CLIP	GCP	PLR-3	M				4	5	6	7	8	9	10											SALEABLE		34950-2011	34950-2021	34951-1631	34951-1641
KEY A, BLACK, WITH CLIPSLOT	160121-2392	A-BLK-CLIP	GCP	PLR-3	M	1	2	3			6	7			10	11	12		14		16			19		SALEABLE		34950-2011	34950-2021	34951-1631	34951-1641
KEY A, BLACK, WITH CLIPSLOT	160121-2393	A-BLK-CLIP	GCP	PLR-3	M		2	3			6				10		12		14							SALEABLE		34950-2011	34950-2021	34951-1631	34951-1641
KEY A, BLACK, WITH CLIPSLOT	160121-2394	A-BLK-CLIP	GCP	PLR-3	M	1	2	3			6	7			10	11	12				16			19		SALEABLE		34950-2011	34950-2021	34951-1631	34951-1641
KEY A, BLACK, WITH CLIPSLOT	160121-2395	A-BLK-CLIP	GCP	PLR-3	M		2	3			6				10		12									SALEABLE		34950-2011	34950-2021	34951-1631	34951-1641
KEY A, BLACK, WITH CLIPSLOT	160121-2396	A-BLK-CLIP	GCP	PLR-3	M	1					6	7	8		10	11						17	18	19	20	SALEABLE		34950-2011	34950-2021	34951-1631	34951-1641
KEY A, BLACK, WITH CLIPSLOT	160121-2397	A-BLK-CLIP	GCP	PLR-3	M	1							8		10	11						17	18	19	20	SALEABLE		34950-2011	34950-2021	34951-1631	34951-1641
KEY A, BLACK, WITH CLIPSLOT	160121-2398	A-BLK-CLIP	GCP	PLR-3	M	1			4	5	6	7	8		10	11	12					17	18	19	20	SALEABLE		34950-2011	34950-2021	34951-1631	34951-1641
KEY A, BLACK, WITH CLIPSLOT	160121-2399	A-BLK-CLIP	GCP	PLR-3	M	1			4	5			8		10	11	12					17	18	19	20	SALEABLE		34950-2011	34950-2021	34951-1631	34951-1641
KEY A, BLACK, WITH CLIPSLOT	160121-2400	A-BLK-CLIP	GCP	PLR-3	M	1			4	5						11	12					17	18			SALEABLE		34950-2011	34950-2021	34951-1631	34951-1641
KEY A, BLACK, WITH CLIPSLOT	160121-2401	A-BLK-CLIP	GCP	PLR-3	M	1			4	5	6	7				11	12					17	18			SALEABLE		34950-2011	34950-2021	34951-1631	34951-1641
KEY A, BLACK, WITH CLIPSLOT	160121-2402	A-BLK-CLIP	GCP	PLR-3	M	1					6	7	8	9		11									20	SALEABLE		34950-2011	34950-2021	34951-1631	34951-1641
KEY A, BLACK, WITH CLIPSLOT	160121-2403	A-BLK-CLIP	GCP	PLR-3	M	1							8			11									20	SALEABLE		34950-2011	34950-2021	34951-1631	34951-1641
KEY A, BLACK, WITH CLIPSLOT	160121-2404	A-BLK-CLIP	GCP	PLR-3	M					5	6					11	12	13					18	19	20	SALEABLE		34950-2011	34950-2021	34951-1631	34951-1641
KEY A, BLACK, WITH CLIPSLOT	160121-2405	A-BLK-CLIP	GCP	PLR-3	M				4	5	6				10	11	12	13			16	17	18	19	20	SALEABLE		34950-2011	34950-2021	34951-1631	34951-1641
KEY A, BLACK, WITH CLIPSLOT	160121-2406	A-BLK-CLIP	GCP	PLR-3	M					5	6	7				11		13					18	19	20	SALEABLE		34950-2011	34950-2021	34951-1631	34951-1641
KEY A, BLACK, WITH CLIPSLOT	160121-2407	A-BLK-CLIP	GCP	PLR-3	M				4	5	6	7			10	11		13			16	17	18	19	20	SALEABLE		34950-2011	34950-2021	34951-1631	34951-1641
KEY A, BLACK, WITH CLIPSLOT	160121-2408	A-BLK-CLIP	GCP	PLR-3	M				4	5	6	7	8		10		12	13			16	17	18	19		SALEABLE		34950-2011	34950-2021	34951-1631	34951-1641
KEY A, BLACK, WITH CLIPSLOT	160121-2409	A-BLK-CLIP	GCP	PLR-3	M					5	6	7	8				12	13					18	19		SALEABLE		34950-2011	34950-2021	34951-1631	34951-1641
KEY A, BLACK, WITH CLIPSLOT	160121-2410	A-BLK-CLIP	GCP	PLR-3	M	1	2	3	4			7	8	9			12	13					18	19		SALEABLE		34950-2011	34950-2021	34951-1631	34951-1641
KEY A, BLACK, WITH CLIPSLOT	160121-2411	A-BLK-CLIP	GCP	PLR-3	M			3	4			7						13					18			SALEABLE		34950-2011	34950-2021	34951-1631	34951-1641
KEY A, BLACK, WITH CLIPSLOT	160121-2412	A-BLK-CLIP	GCP	PLR-3	M				4			7											18			SALEABLE		34950-2011	34950-2021	34951-1631	34951-1641
KEY A, BLACK, WITH CLIPSLOT	160121-2413	A-BLK-CLIP	GCP	PLR-3	M						6													19		SALEABLE		34950-2011	34950-2021	34951-1631	34951-1641
KEY A, BLACK, WITH CLIPSLOT	160121-2414	A-BLK-CLIP	GCP	PLR-3	M								8					13	14	15	16	17	18	19	20	SALEABLE		34950-2011	34950-2021	34951-1631	34951-1641
KEY B, LIGHT GRAY, WITH CLIPSLOT	160121-2415	B-LG-CLIP	GCP	PLR-3	M	1	2	3	4			7	8	9			12	13					18	19		SALEABLE		34950-2011	34950-2021	34951-1631	34951-1641
KEY B, LIGHT GRAY, WITH CLIPSLOT	160121-2416	B-LG-CLIP	GCP	PLR-3	M			3	4			7						13					18			SALEABLE		34950-2011	34950-2021	34951-1631	34951-1641
KEY B, LIGHT GRAY, WITH CLIPSLOT	160121-2417	B-LG-CLIP	GCP	PLR-3	M				4			7											18			SALEABLE		34950-2011	34950-2021	34951-1631	34951-1641
KEY A, BLACK, WITH CLIPSLOT	160121-2418	A-BLK-CLIP	GCP	PLR-3	M									9			12			15			18			SALEABLE		34950-2011	34950-2021	34951-1631	34951-1641
KEY A, BLACK, WITH CLIPSLOT	160121-2419	A-BLK-CLIP	GCP	PLR-3	M										10	11									20	SALEABLE		34950-2011	34950-2021	34951-1631	34951-1641
KEY A, BLACK, WITH CLIPSLOT	160121-2420	A-BLK-CLIP	GCP	PLR-3	M	1		3	4	5	6	7	8		10	11	12								20	SALEABLE		34950-2011	34950-2021	34951-1631	34951-1641
KEY A, BLACK, WITH CLIPSLOT	160121-2421	A-BLK-CLIP	GCP	PLR-3	M										10	11	12								20	SALEABLE		34950-2011	34950-2021	34951-1631	34951-1641
KEY A, BLACK, WITH CLIPSLOT	160121-2422	A-BLK-CLIP	GCP	PLR-3	M			3		5	6					11	12	13								SALEABLE		34950-2011	34950-2021	34951-1631	34951-1641
KEY A, BLACK, WITH CLIPSLOT	160121-2423	A-BLK-CLIP	GCP	PLR-3	M					5			8						14			17				SALEABLE		34950-2011	34950-2021	34951-1631	34951-1641
KEY A, BLACK, WITH CLIPSLOT	160121-2424	A-BLK-CLIP	GCP	PLR-3	M	1	2	3		5	6	7	8			11	12	13								SALEABLE		34950-2011	34950-2021	34951-1631	34951-1641
KEY A, BLACK, WITH CLIPSLOT	160121-2425	A-BLK-CLIP	GCP	PLR-3	M										10	11	12									SALEABLE		34950-2011	34950-2021	34951-1631	34951-1641
KEY B, LIGHT GRAY, WITH CLIPSLOT	160121-2426	B-LG-CLIP	GCP	PLR-3	M	1	2	3	4	5	6	7	8	9			12	13					18	19	20	SALEABLE		34950-2011	34950-2021	34951-1631	34951-1641
KEY B, LIGHT GRAY, WITH CLIPSLOT	160121-2427	B-LG-CLIP	GCP	PLR-3	M			3	4	5	6	7						13					18		20	SALEABLE		34950-2011	34950-2021	34951-1631	34951-1641
KEY B, LIGHT GRAY, WITH CLIPSLOT	160121-2428	B-LG-CLIP	GCP	PLR-3	M				4	5	6	7											18		20	SALEABLE		34950-2011	34950-2021	34951-1631	34951-1641
KEY A, BLACK, WITH CLIPSLOT	160121-2429	A-BLK-CLIP	GCP	PLR-3	M			3	4			7			10						16	17				SALEABLE		34950-2011	34950-2021	34951-1631	34951-1641

TABLE OF CONTENTS

SHEET NO.	SHEET DESCRIPTION
1	NOTES AND BOM
2	CONFIGURATIONS
3-4	KEY CONFIGURATIONS
5	RECEPTACLE CONNECTOR ASSEMBLY
6	BACKSHELL NOTES
7	BACKSHELL
8	BACKSHELL CONFIGURATIONS
9	2X10 CONNECTOR INTERFACE DEFINITION

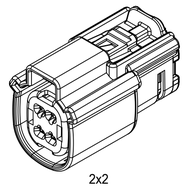

2x2

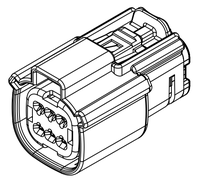

2x3

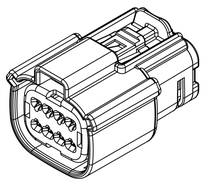

2x4

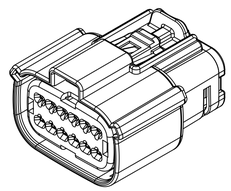

2x6

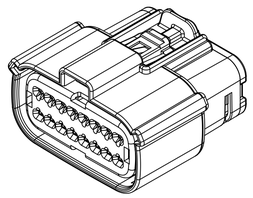

2x8

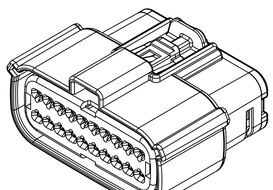

2x10

NOTES: VALID UNLESS OTHERWISE SPECIFIED

1. GENERAL:
a. APPLICATION SPECIFICATION SEE: AS-33472-100
-CONTAINS: PRODUCT INTRODUCTION, PRODUCT SUMMARY, CONNECTOR ASSEMBLY, PACKAGING INFORMATION, CONNECTOR MATING, SERVICE INSTRUCTIONS, ELECTRICAL CONTINUITY CHECKING, CRIMPING, AND TROUBLESHOOTING.
-DESIGNED TO MATE WITH DEVICE OR CONNECTOR AS SPECIFIED IN THE MATING INTERFACE/CONNECTOR DRAWINGS CHART.
*DENOTES DRAWINGS THAT CAN BE ACCESSED AT <http://ewcap.uscarteams.org/>.
-ASSEMBLY SHIPPED WITH PLR IN PRE-LOCK POSITION (SEE PLR PRE-LOCK VIEW SHEET 5).
b. PRODUCT SPECIFICATION SEE:
-STANDARD CONFIGURATION (STD): PS-33472-000
-TRANSMISSION CONFIGURATION (TRNS):
CONTAINS SILICONE: TS-160038-0001
SILICONE FREE: TBD
-UL V0 CONFIGURATION (UL V0): TBD
CONTAINS: PRODUCT INTRODUCTION, PRODUCT SUMMARY, RATINGS (CURRENT, TEMPERATURE, SEALING, AND FLAMMABILITY), TERMINALS, WIRE DIAMETER RANGE, PRODUCT VALIDATION, AND PRODUCT DEVIATIONS.
c. PACKAGING SPECIFICATION PER MOLEX DRAWING: SEE PACKAGING CHART
d. PARTS MUST BE IN COMPLIANCE TO MOLEX CHEMICAL SUBSTANCES FOR PRODUCTS AND PACKAGING SPECIFICATION: QEHS-699000-301
e. DATA MUST BE SUBMITTED UNDER THE MOLEX PART NUMBER TO IMDS (COMPANY ID#13255)

2. DESIGN - MATERIALS:
a. FOR BILL OF MATERIALS SEE:
-STANDARD CONFIGURATION SD-33472-0002
-TRANSMISSION CONGURATION
CONTAINS SILICONE: SD-160038-0002
SILICONE FREE: SD-160092-0002
-UL V0 CONFIGURATION SD-160074-0002
b. TRANSMISSION CONNECTOR COMPONENTS MUST MEET THE MATERIAL REQUIREMENTS SPECIFIED IN TS-160038-0001 & TBD

3. DESIGN - GEOMETRY:
a. THE 3-D CAD DATA IS BASIC (WITHOUT TOLERANCE) AND MASTER FOR THIS PART WITH THE EXCEPTION OF UNDERLINED DIMENSIONS. DIMENSIONAL INFORMATION NOT SHOWN ON THIS DRAWING IS DEFINED BY THE DATA FILE AT ITS LATEST REVISION.
b. GEOMETRIC DIMENSIONS AND TOLERANCES PER ASME Y14.5M-2009
c. EDGES AND UNDIMENSIONED DETAILS PER ISO13715
d. CORNERS SHOWN AS SHARP TO BE R 0.2 MAX.
e. LETTERING SHALL BE 0.15 MAX RAISED IN 0.25 MAX RECESS PAD. THIS INCLUDES RECYCLING CODE, CAVITY ID, VENDOR IDENTIFICATION, AND CUSTOMER MATERIAL NUMBER.
f. VISUAL DEFECTS SHALL MEET COSMETIC STANDARD PS-45499-002 (Class B).
g. LASER MARKING:
1. PART NUMBER
2. DAY OF THE YEAR
3. SHIFT
4. YEAR
FOR ADDITIONAL INFORMATION SEE SECTION 5 UNDER PROCEDURES IN ES-34735-008.
B h. 2X2 CLIP-SLOT DESIGN IS BASED ON USCAR/EWCAP 7mm CLIP SLOT EWCAP - 005 - 7
2X3 THRU 2X10 CLIP-SLOT DESIGN IS BASED ON USCAR/EWCAP 11mm CLIP SLOT EWCAP - 005 - 11

DESCRIPTION	DRAWING NO.
2X2	PK-31300-635
2X3	PK-31300-903
2X4	PK-31300-903
2X6	PK-31300-903
2X8	PK-31300-903
2X10	PK-31300-903

MATING INTERFACE/CONNECTOR DRAWINGS

DESCRIPTION	INTERFACE DEFINITION	MOLEX INLINE
STANDARD 2X2	*150-S-004-2-Z02	SD-33482-0001
UL V0 2X2	*150-S-004-2-Z02	SD-33482-0001
STANDARD 2X3	*150-S-006-2-Z02	SD-33482-0001
TRANSMISSION 2X3	*150-S-006-2-Z02	N/A
STANDARD 2X4	*150-S-008-2-Z02	SD-33482-0001
UL V0 2X4	*150-S-008-2-Z02	SD-33482-0001
STANDARD 2X6	*150-S-012-2-Z01	SD-33482-0001
UL V0 2X6	*150-S-012-2-Z01	SD-33482-0001
STANDARD 2X8	*150-S-016-2-Z01	SD-33482-0001
STANDARD 2X10	SD-33472-0001	SD-33482-0001
UL V0 2X10	SD-33472-0001	SD-33482-0001

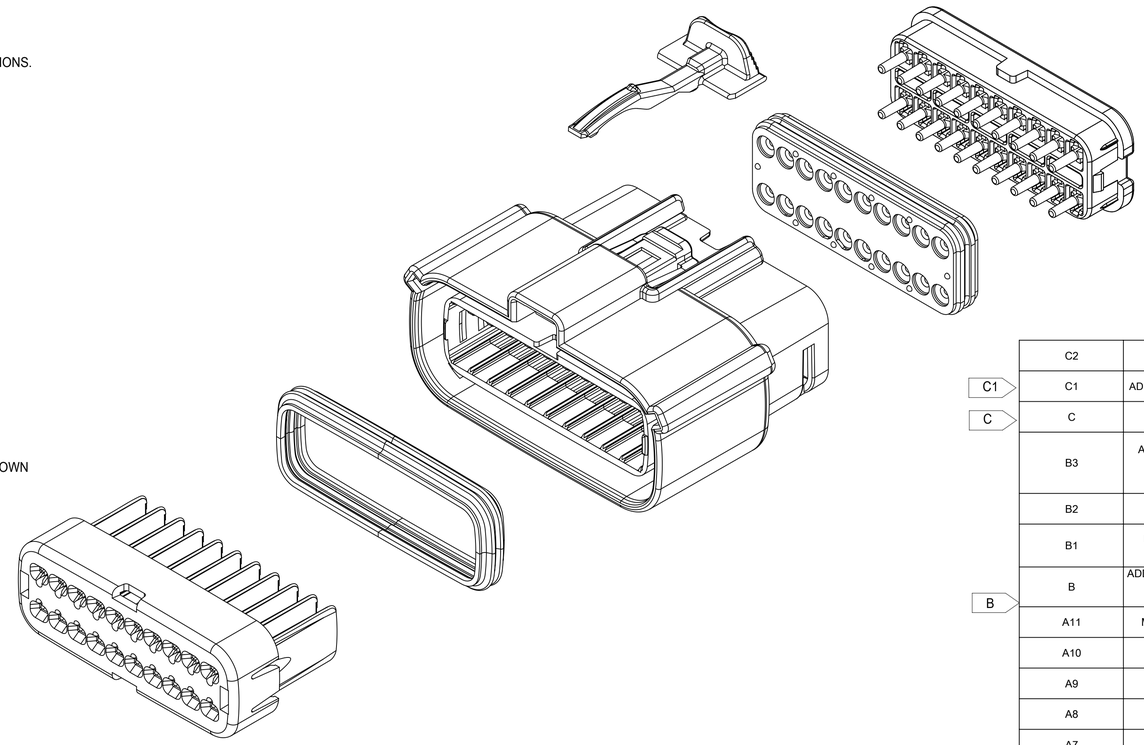

REV	REV DESCRIPTION
C2	ADDED MOLEX BACKSHELL DETAILS
C1	ADDED 2X6-TRNS.-WITH/WITHOUT CLIPSLOT *
C	ADDED 2X10-STD.-WITH CLIPSLOT *
B3	ADD ROW FOR 2X6 V0 ON SHEET 5DIM3# UPDATE TO 25.0 MAX FOR V0DIM11# UPDATE TO 33.85 MAX FOR V0
B2	ADD 2X6 UL V0 CONFIGURATIONS
B1	UPDATE 2X6 W/O CLIPSLOT DIM G ON TABLE OF SHEET 5
B	ADDED 2X2 - STD- WITH CLIPSLOT, 2X8 - STD- WITH CLIPSLOT AND NOTE h
A11	MINOR GEOMETRY CHANGE FOR UL V0
A10	UPDATED 2X4 DRAWING NUMBER
A9	UPDATED 2X10 PART NUMBERS
A8	UPDATED 2X3 DRAWING NUMBER
A7	UPDATED 2X10 INTERFACE
A6	ADDED TRANSMISSION REFERENCES
A5	ADD 2X10 INTERFACE SHEETS
A4	ADD UL V0 CONFIGURATIONS
A3	ADDED 2X3 STD AND TRANSMISSION
A2	UPDATED 2X8 BLD DRAWINGS
A1	FIXED TYPO IN NOTE 1a, UPDATED 2X6 MOLEX INLINE BLADE DRAWING
A	INITIAL RELEASE

INSPECTION NUMBER LOG
LAST NUMBER: 11
ADDED: 11
REMOVED:

SYMBOLS
= 0
= 0
= 0
= 0
= 0
= 0
= 0
= 0
= 0

THIS DRAWING CONTAINS INFORMATION THAT IS PROPRIETARY TO MOLEX ELECTRONIC TECHNOLOGIES, LLC AND SHOULD NOT BE USED WITHOUT WRITTEN PERMISSION

DIMENSION UNITS	SCALE
mm	1:1

GENERAL TOLERANCES (UNLESS SPECIFIED)

ANGULAR TOL	±	1.0 °
4 PLACES	±	
3 PLACES	±	
2 PLACES	±	0.1
1 PLACE	±	0.2
0 PLACES	±	

DRAFT WHERE APPLICABLE MUST REMAIN WITHIN DIMENSIONS

CURRENT REV DESC:

EC NO: 171650
DRWN: DDEB 2018/01/19
CHK'D: MVANSLAMBROU 2018/02/16
APPR: MVANSLAMBROU 2018/02/16

INITIAL REVISION:
DRWN: APROFFITT 2014/05/14
APPR: VKOSHY 2014/06/27

THIRD ANGLE PROJECTION | DRAWING: A1-SIZE | SERIES: 33472

molex

MX150 RCPT
DUAL ROW SEALED ASSEMBLY MAT SEAL

PRODUCT CUSTOMER DRAWING

DOCUMENT NUMBER	DOC TYPE	DOC PART	REVISION
SD-33472-0001	PSD	001	C2

MATERIAL NUMBER | CUSTOMER: GENERAL MARKET | SHEET NUMBER: 1 OF 11

DOCUMENT STATUS	P1	RELEASE DATE	2018/02/16 22:02:25

SHEET DESCRIPTION

CONFIGURATIONS

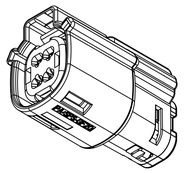

2X2 - STD.
2X2 - TRNS. - SILICONE FREE †

B

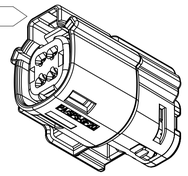

2X2 - STD. - WITH CLIPSLOT *

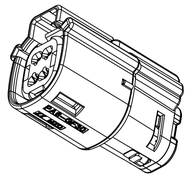

† 2X2 - UL V0

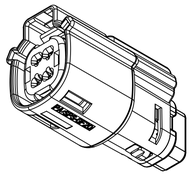

2X2 - STD. - LENGTHENED

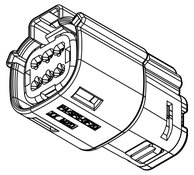

2X3 - STD.
2X3 - TRNS. - CONTAINS SILICONE †

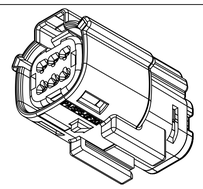

2X3 - STD. - WITH CLIPSLOT *

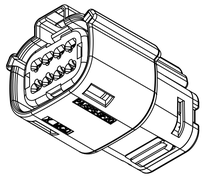

2X4 - STD.

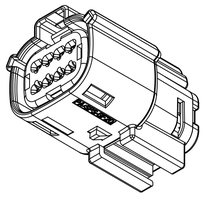

2X4 - STD. - WITH CLIPSLOT *

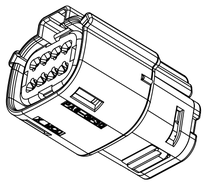

† 2X4 - UL V0

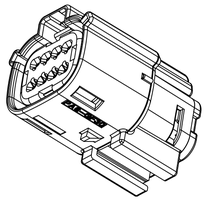

† 2X4 - UL V0-WITH CLIPSLOT*

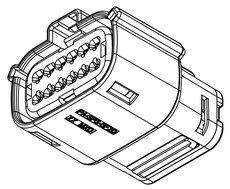

2X6 - STD.
C1 † 2X6 - TRNS.

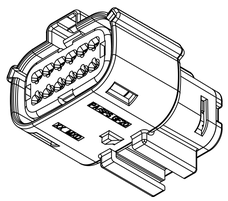

2X6 - STD. - WITH CLIPSLOT *
C1 † 2X6 - TRNS. - WITH CLIPSLOT *

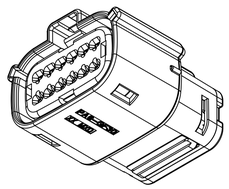

† 2X6 - UL V0

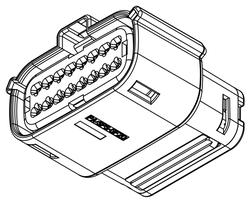

2X8 - STD.

B

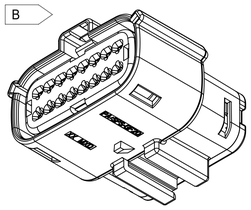

2X8 - STD. - WITH CLIPSLOT *

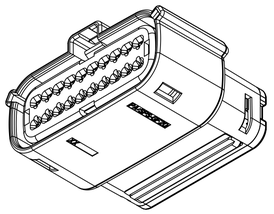

2X10 - STD.

C

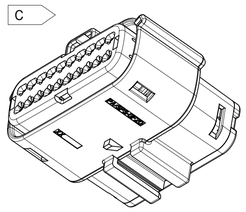

2X10 - STD. - WITH CLIPSLOT *

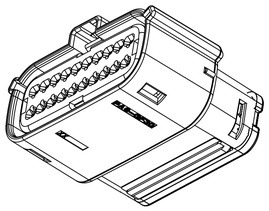

† 2X10 - UL V0

* WITH CLIPSLOT CONFIGURATION DOES NOT
MEET THE USCAR PACKAGING FRAME REQUIREMENTS
† MINOR GEOMETRY DIFFERENCE THAN STANDARD CONFIGURATION
SEE NOTES 1a & 2a-b FOR MORE INFORMATION

DOCUMENT STATUS	P1	RELEASE DATE	2018/02/16	22:02:25

SYMBOLS
A = 0
C = 0
F = 0
S = 0
= 0
C = 0
= 0
= 0
= 0

THIS DRAWING CONTAINS INFORMATION THAT IS PROPRIETARY TO MOLEX ELECTRONIC TECHNOLOGIES, LLC AND SHOULD NOT BE USED WITHOUT WRITTEN PERMISSION

DIMENSION UNITS	SCALE
mm	1:1

GENERAL TOLERANCES (UNLESS SPECIFIED)

ANGULAR TOL	±	1.0 °
4 PLACES	±	
3 PLACES	±	
2 PLACES	±	0.1
1 PLACE	±	0.2
0 PLACES	±	

DRAFT WHERE APPLICABLE MUST REMAIN WITHIN DIMENSIONS

CURRENT REV DESC:

EC NO: 171650
DRWN: DDEB 2018/01/19
CHK'D: MVANSLAMBROU 2018/02/16
APPR: MVANSLAMBROU 2018/02/16

INITIAL REVISION:
DRWN: APROFFITT 2014/05/14
APPR: VKOSHY 2014/06/27

THIRD ANGLE PROJECTION | DRAWING: A1-SIZE | SERIES: 33472

molex

MX150 RCPT
DUAL ROW SEALED ASSEMBLY MAT SEAL

PRODUCT CUSTOMER DRAWING

DOCUMENT NUMBER	DOC TYPE	DOC PART	REVISION
SD-33472-0001	PSD	001	C2

MATERIAL NUMBER	CUSTOMER	SHEET NUMBER
	GENERAL MARKET	2 OF 11

SHEET DESCRIPTION

KEY CONFIGURATIONS

2X2

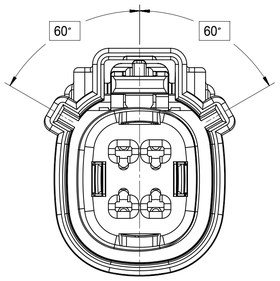

KEY A

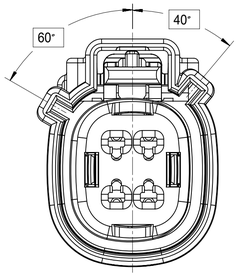

KEY B

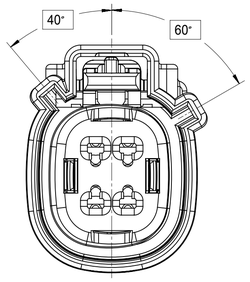

KEY C

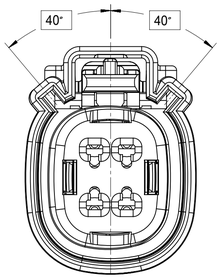

KEY D

2X3

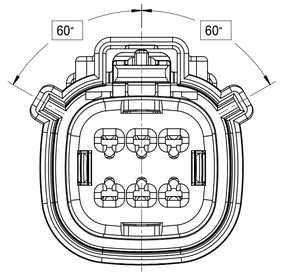

KEY A

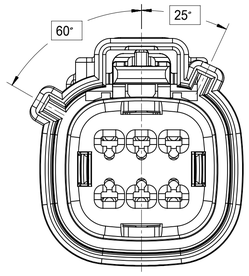

KEY B

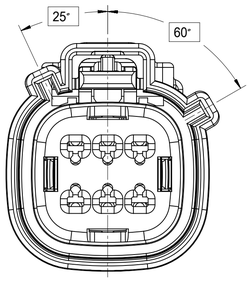

KEY C

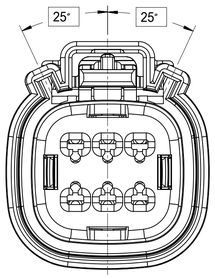

KEY D

2X4

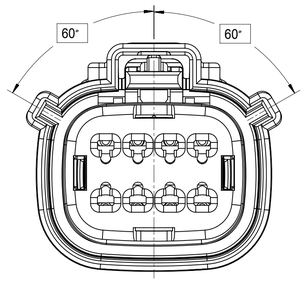

KEY A

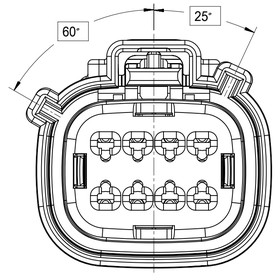

KEY B

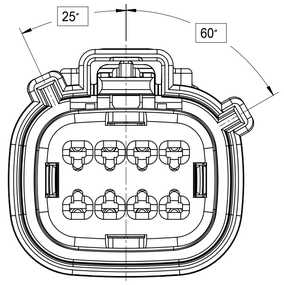

KEY C

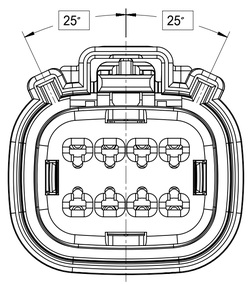

KEY D

SYMBOLS	
A	= 0
C	= 0
B	= 0
S	= 0
	= 0
C	= 0
	= 0
	= 0
D	= 0

THIS DRAWING CONTAINS INFORMATION THAT IS PROPRIETARY TO MOLEX ELECTRONIC TECHNOLOGIES, LLC AND SHOULD NOT BE USED WITHOUT WRITTEN PERMISSION

DIMENSION UNITS	SCALE
mm	1:1

GENERAL TOLERANCES (UNLESS SPECIFIED)		
ANGULAR TOL	±	1.0 °
4 PLACES	±	
3 PLACES	±	
2 PLACES	±	0.1
1 PLACE	±	0.2
0 PLACES	±	

DRAFT WHERE APPLICABLE MUST REMAIN WITHIN DIMENSIONS

CURRENT REV DESC:

EC NO: 171650
DRWN: DDEB 2018/01/19
CHK'D: MVANSLAMBROU 2018/02/16
APPR: MVANSLAMBROU 2018/02/16

INITIAL REVISION:
DRWN: APROFFITT 2014/05/14
APPR: VKOSHY 2014/06/27

THIRD ANGLE PROJECTION | DRAWING: A1-SIZE | SERIES: 33472

molex

MX150 RCPT
DUAL ROW SEALED ASSEMBLY MAT SEAL

PRODUCT CUSTOMER DRAWING

DOCUMENT NUMBER	DOC TYPE	DOC PART	REVISION
SD-33472-0001	PSD	001	C2

MATERIAL NUMBER	CUSTOMER	SHEET NUMBER
	GENERAL MARKET	3 OF 11

DOCUMENT STATUS	P1	RELEASE DATE	2018/02/16 22:02:25

TEMPLATE: creator-tb-prod-A-1
SCHEMATIC: no
DATE: 2017/10/09

SHEET DESCRIPTION

KEY CONFIGURATIONS CONT.

2X6

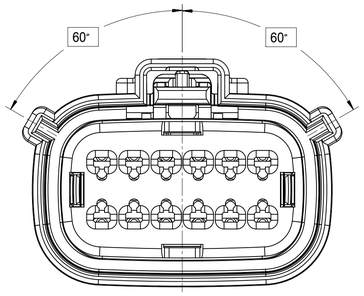

KEY A

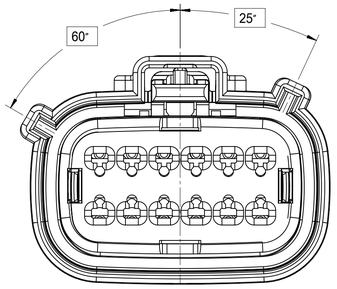

KEY B

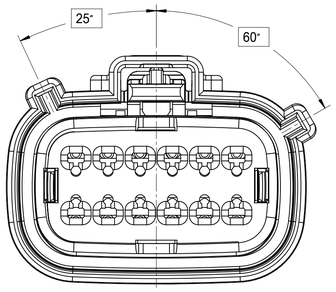

KEY C

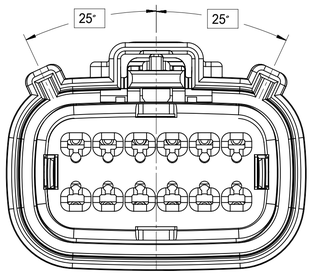

KEY D

2X8

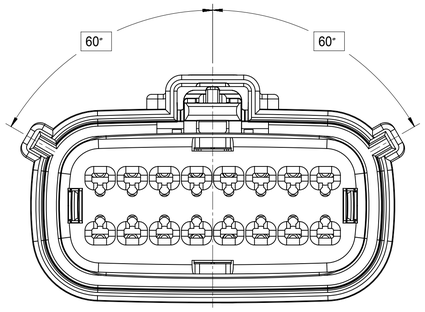

KEY A

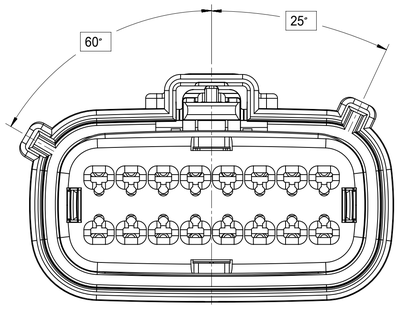

KEY B

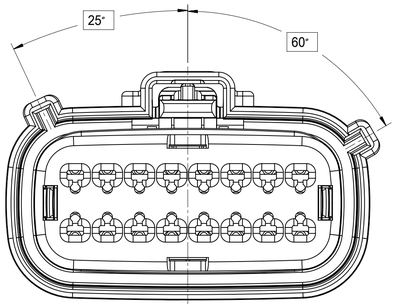

KEY C

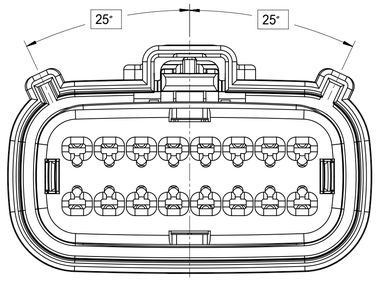

KEY D

2X10

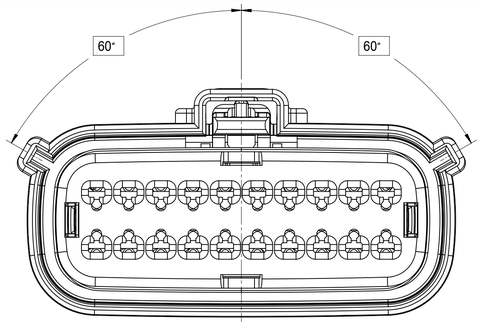

KEY A

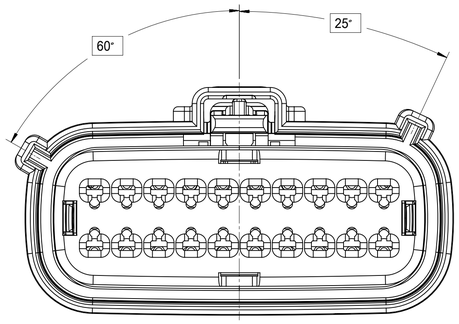

KEY B

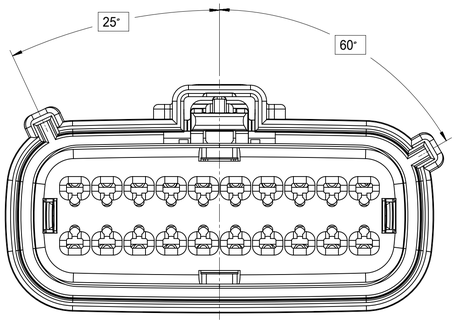

KEY C

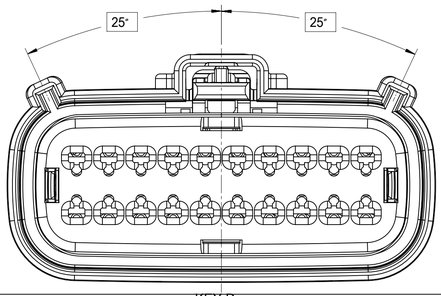

KEY D

SYMBOLS	
F/A	= 0
F/C	= 0
F/P	= 0
S	= 0
	= 0
C	= 0
	= 0
	= 0
	= 0

THIS DRAWING CONTAINS INFORMATION THAT IS PROPRIETARY TO MOLEX ELECTRONIC TECHNOLOGIES, LLC AND SHOULD NOT BE USED WITHOUT WRITTEN PERMISSION

DIMENSION UNITS	SCALE
mm	1:1

GENERAL TOLERANCES (UNLESS SPECIFIED)

ANGULAR TOL	±	1.0 °
4 PLACES	±	
3 PLACES	±	
2 PLACES	±	0.1
1 PLACE	±	0.2
0 PLACES	±	

DRAFT WHERE APPLICABLE MUST REMAIN WITHIN DIMENSIONS

CURRENT REV DESC:

EC NO: 171650
DRWN: DDEB 2018/01/19
CHK'D: MVANSLAMBROU 2018/02/16
APPR: MVANSLAMBROU 2018/02/16

INITIAL REVISION:
DRWN: APROFFITT 2014/05/14
APPR: VKOSHY 2014/06/27

THIRD ANGLE PROJECTION | DRAWING: A1-SIZE | SERIES: 33472

molex

MX150 RCPT
DUAL ROW SEALED ASSEMBLY MAT SEAL

PRODUCT CUSTOMER DRAWING

DOCUMENT NUMBER	DOC TYPE	DOC PART	REVISION
SD-33472-0001	PSD	001	C2

MATERIAL NUMBER	CUSTOMER	SHEET NUMBER
	GENERAL MARKET	4 OF 11

DOCUMENT STATUS	P1	RELEASE DATE	2018/02/16 22:02:25

FORMAT: master-tb-prod-A1
DRAWING: N
DATE: 2017/10/06

SHEET DESCRIPTION

RECEPTACLE CONNECTOR ASSEMBLY

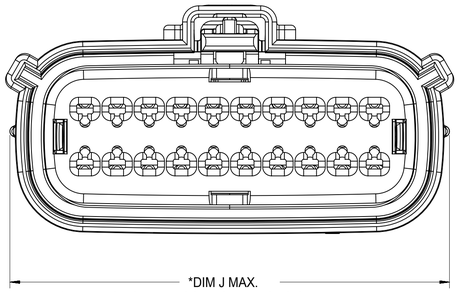

* APPLIES TO UL-V0 CONFIGURATIONS ONLY

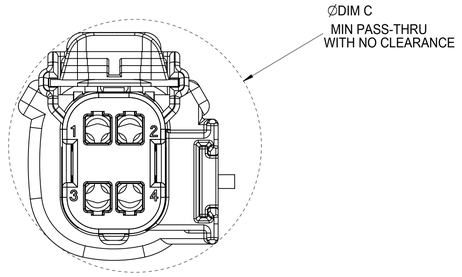

B APPLIES TO 2X2 - STD. - WITH CLIPSLOT ONLY

CHARTED DIMENSIONS

DESCRIPTION	DIMENSIONS							
	A	B	C	D	E	F	G	J
2X2 W/O CLIPSLOT	18.58	1.75	25.45	24.81	37.65	N/A	2.75±0.50	
2X2 W/ CLIPSLOT	18.58	1.75	27.65	24.81	37.65	N/A	2.75±0.50	
2X2 LENGTHENED	18.58	1.75	25.45	24.81	42.25	N/A	2.75±0.50	20.04
2X3 W/ CLIPSLOT	22.25	3.5	30.50	N/A	37.65	27.96	4.0±0.4	
2X3 W/O CLIPSLOT	22.25	3.5	26.24	24.90	37.65	N/A	4.0±0.4	
2X4 W/ CLIPSLOT	25.75	1.75	31.50	N/A	37.65	28.00	2.75±0.50	27.04
2X4 W/O CLIPSLOT	25.75	1.75	29.19	24.81	37.65	N/A	2.75±0.50	27.04
2X6 W/ CLIPSLOT	32.75	1.75	35.58	N/A	37.65	27.76	2.75±0.50	
2X6 W/O CLIPSLOT	32.75	1.75	35.58	24.90	37.65	N/A	2.75±0.50	32.95
2X6 W/O CLIPSLOT V0	32.75	1.75	35.58	25.0	37.65	N/A	2.75±0.50	33.85
2X8 W/O CLIPSLOT	39.80	1.75	42.25	24.90	37.65	N/A	4.0±0.4	
2X8 W/ CLIPSLOT	39.80	1.75	42.25	N/A	37.65	27.80	4.0±0.4	
2X10 W/O CLIPSLOT	46.75	1.75	49.95	24.90	37.65	N/A	2.75±0.50	48.04
2X10 W/ CLIPSLOT	46.75	1.75	49.95	N/A	37.65	27.80	2.75±0.50	

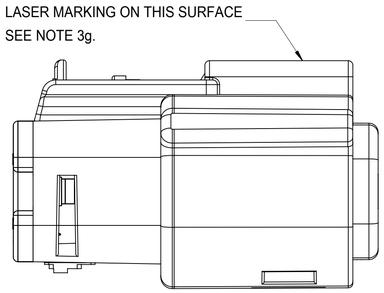

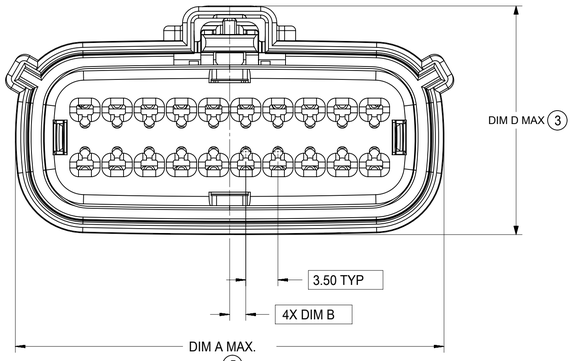

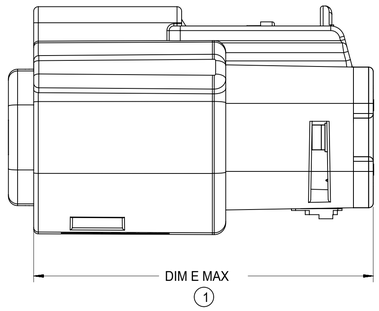

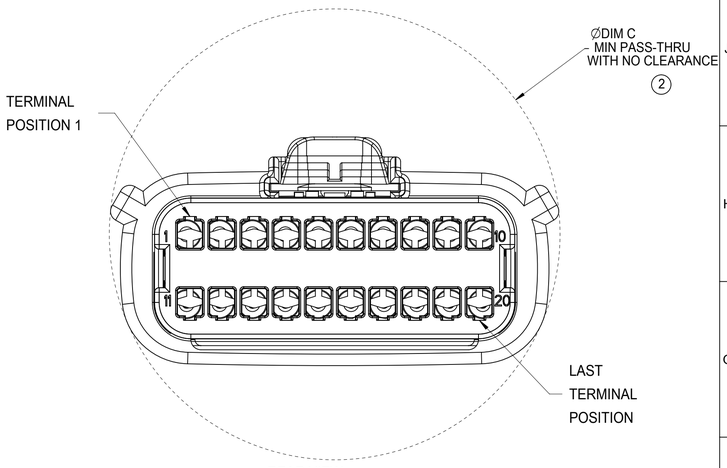

REAR VIEW
(WIRE HARNESS SIDE)

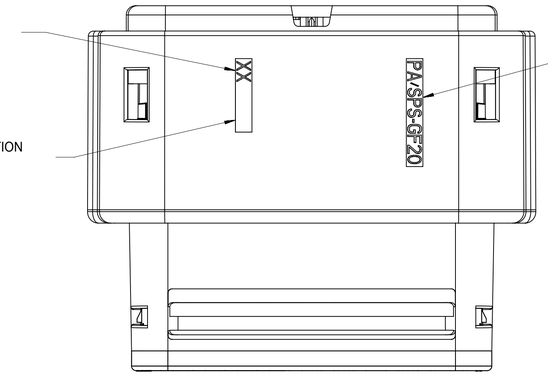

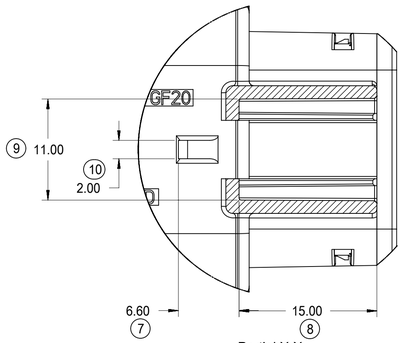

Partial X-X
SCALE 3:1

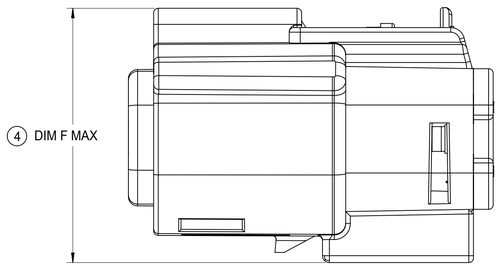

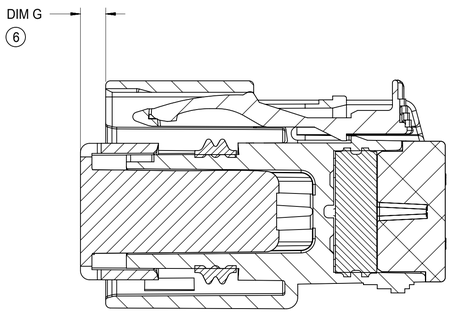

PRIMARY LOCK REINFORCEMENT (PLR) SHOWN
IN PRE-STAGED POSITION

SECTION Y-Y

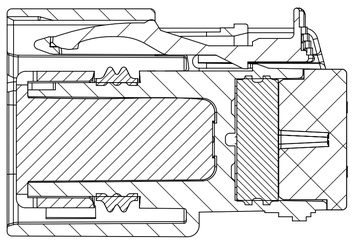

PRIMARY LOCK REINFORCEMENT (PLR) SHOWN
IN FINAL-LOCK POSITION

SECTION Z-Z

SYMBOLS	
A = 0	
E = 0	
F = 0	
S = 0	
= 0	
C = 0	
= 0	
= 0	
G = 0	

THIS DRAWING CONTAINS INFORMATION THAT IS PROPRIETARY TO MOLEX ELECTRONIC TECHNOLOGIES, LLC AND SHOULD NOT BE USED WITHOUT WRITTEN PERMISSION

DIMENSION UNITS	SCALE
mm	1:1

GENERAL TOLERANCES (UNLESS SPECIFIED)

ANGULAR TOL	±	1.0 °
4 PLACES	±	
3 PLACES	±	
2 PLACES	±	0.1
1 PLACE	±	0.2
0 PLACES	±	

DRAFT WHERE APPLICABLE MUST REMAIN WITHIN DIMENSIONS

CURRENT REV DESC:

EC NO: 171650
DRWN: DDEB 2018/01/19
CHK'D: MVANSLAMBROU 2018/02/16
APPR: MVANSLAMBROU 2018/02/16

INITIAL REVISION:
DRWN: APROFFITT 2014/05/14
APPR: VKOSHY 2014/06/27

THIRD ANGLE PROJECTION | DRAWING: A1-SIZE | SERIES: 33472

molex

MX150 RCPT
DUAL ROW SEALED ASSEMBLY MAT SEAL

PRODUCT CUSTOMER DRAWING

DOCUMENT NUMBER	DOC TYPE	DOC PART	REVISION
SD-33472-0001	PSD	001	C2

MATERIAL NUMBER	CUSTOMER	SHEET NUMBER
	GENERAL MARKET	5 OF 11

DOCUMENT STATUS	P1	RELEASE DATE	2018/02/16 22:02:25

SHEET DESCRIPTION
BACKSHELL NOTES

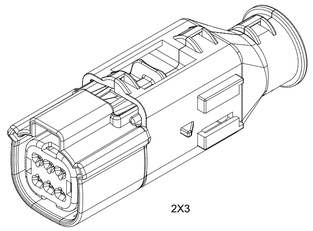

2X3

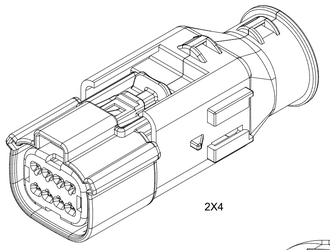

2X4

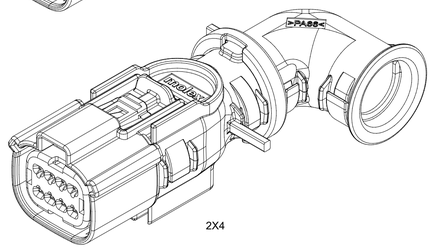

2X4

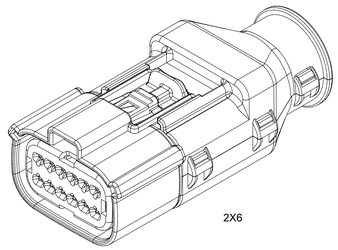

2X6

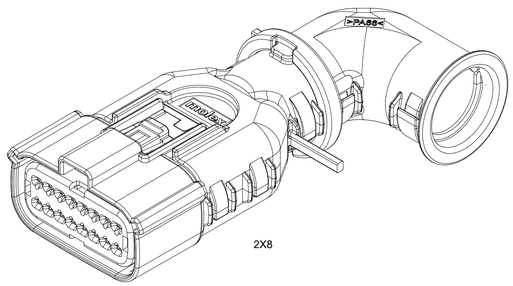

2X8

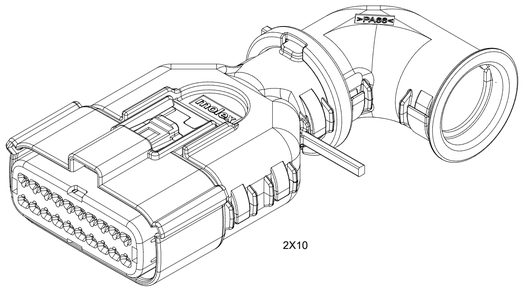

2X10

BACKSHELL NOTES: VALID UNLESS OTHERWISE SPECIFIED

1. GENERAL:

a. APPLICATION SPECIFICATION SEE: AS-34951-001

-DESIGNED TO MATE WITH RECEPTACLE SEALED ASSEMBLY SPECIFIED IN MOLEX DRAWING SD-33472-0001.

-SYSTEM TO BE USED WITH WIRE WITHIN DIAMETER RANGE OF 1.2mm TO 2.69mm.

-COMPONENTS ARE OPTIONAL AND MUST BE PURCHASED SEPERATELY.

-DESIGN IS OWNED BY SCHLEMMER FOR SCHLEMMER BACKSHELL.

-DESIGN IS OWNED BY MOLEX FOR MOLEX BACKSHELL.

-90˚ ADAPTOR DESIGN IS OWNED BY MOLEX.

-FOR ADDITIONAL INFORMATION SEE THE BACKSHELL COMPONENT DRAWING SD-34951-0001.

BACKSHELL CUSTOMER
MODEL NUMBER LEGEND

34951-XXXX

CUSTOMER MODEL COMPONENTS
- 0 - SCHLEMMER BACKSHELL ONLY
- 1 - SCHLEMMER BACKSHELL & MX150 HOUSING KEY A ASSEMBLY
- 2 - SCHLEMMER BACKSHELL & MX150 HOUSING KEY B ASSEMBLY
- 3 - SCHLEMMER BACKSHELL & MX150 HOUSING KEY C ASSEMBLY
- 4 - SCHLEMMER BACKSHELL & MX150 HOUSING KEY D ASSEMBLY
- 5 - MOLEX BACKSHELL ONLY
- 6 - MOLEX BACKSHELL & MX150 HOUSING KEY A ASSEMBLY
- 7 - MOLEX BACKSHELL & MX150 HOUSING KEY B ASSEMBLY
- 8 - MOLEX BACKSHELL & MX150 HOUSING KEY C ASSEMBLY
- 9 - MOLEX BACKSHELL & MX150 HOUSING KEY D ASSEMBLY

BACKSHELL FEATURES
- 1 - WITH RIBS
- 2 - WITHOUT RIBS
- 3 - 90˚ ADAPTOR

MX150 CIRCUIT SIZE 04, 06, 08, 12, 16, 20

90˚ ADAPTOR

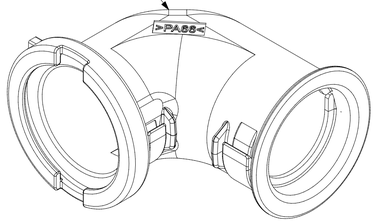

BACKSHELL (BKS)

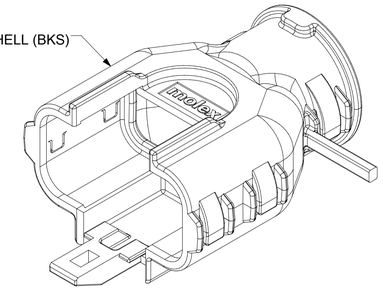

RECEPTACLE SEALED ASSEMBLY

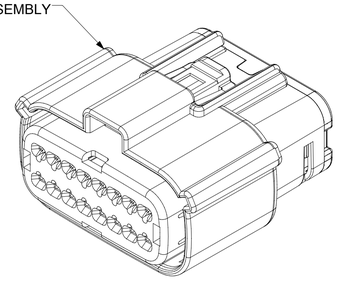

SCALE 2:1

SYMBOLS	
A	= 0
C	= 0
F	= 0
S	= 0
	= 0
	= 0
	= 0
	= 0
	= 0
	= 0

THIS DRAWING CONTAINS INFORMATION THAT IS PROPRIETARY TO MOLEX ELECTRONIC TECHNOLOGIES, LLC AND SHOULD NOT BE USED WITHOUT WRITTEN PERMISSION

DIMENSION UNITS	SCALE
mm	1.5:1

GENERAL TOLERANCES (UNLESS SPECIFIED)		
ANGULAR TOL	±	1.0 °
4 PLACES	±	
3 PLACES	±	
2 PLACES	±	0.1
1 PLACE	±	0.2
0 PLACES	±	

DRAFT WHERE APPLICABLE MUST REMAIN WITHIN DIMENSIONS

CURRENT REV DESC:

EC NO: 171650
DRWN: DDEB 2018/01/19
CHK'D: MVANSLAMBROU 2018/02/16
APPR: MVANSLAMBROU 2018/02/16

INITIAL REVISION:
DRWN: APROFFITT 2014/05/14
APPR: VKOSHY 2014/06/27

THIRD ANGLE PROJECTION | DRAWING: A1-SIZE | SERIES: 33472

molex

MX150 RCPT
DUAL ROW SEALED ASSEMBLY MAT SEAL

PRODUCT CUSTOMER DRAWING

DOCUMENT NUMBER	DOC TYPE	DOC PART	REVISION
SD-33472-0001	PSD	001	C2

MATERIAL NUMBER	CUSTOMER	SHEET NUMBER
	GENERAL MARKET	6 OF 11

DOCUMENT STATUS	P1	RELEASE DATE	2018/02/16 22:02:25

TEMPLATE: molex-landscape
REVISION: H
DATE: 2017/10/05

SHEET DESCRIPTION
SCHLEMMER BACKSHELL

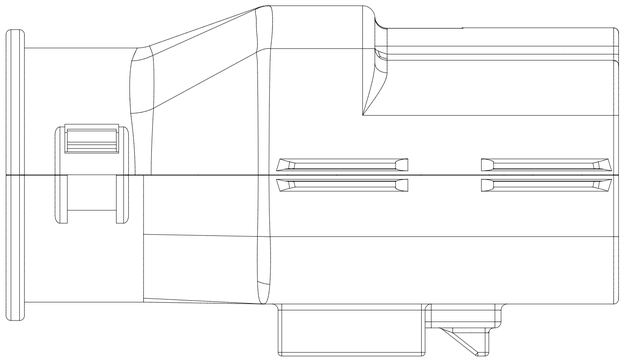

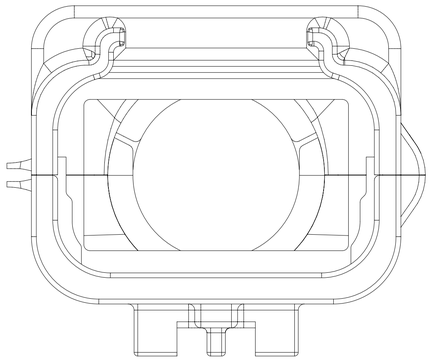

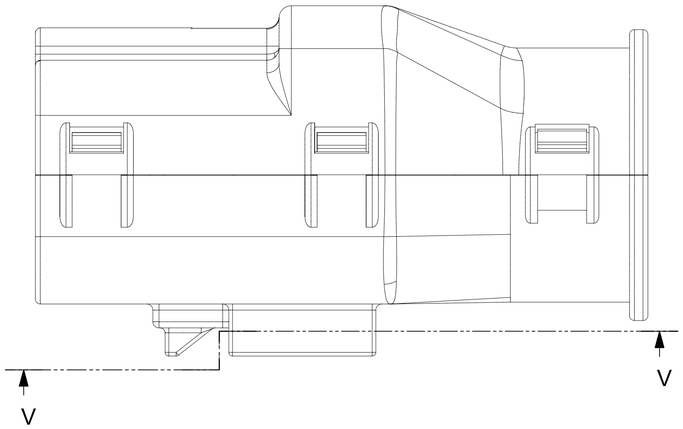

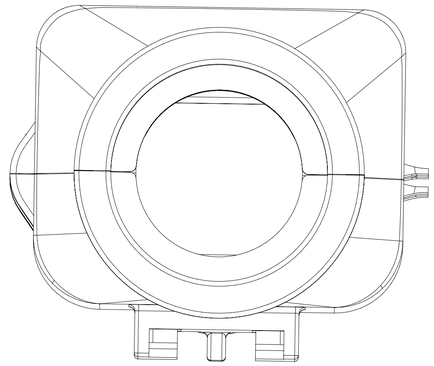

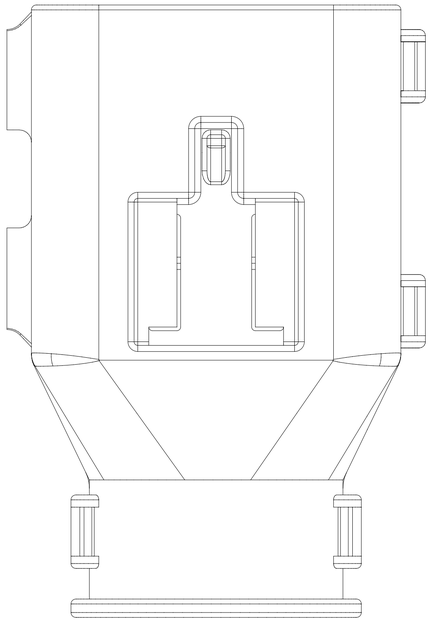

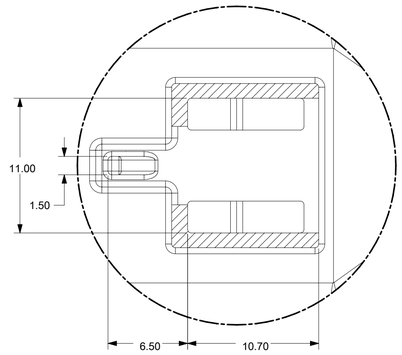

Partial V-V
SCALE 4:1

SYMBOLS	
F/A	= 0
E/C	= 0
E/F	= 0
S	= 0
▼	= 0
C	= 0
☒	= 0
■	= 0
V	= 0

THIS DRAWING CONTAINS INFORMATION THAT IS PROPRIETARY TO MOLEX ELECTRONIC TECHNOLOGIES, LLC AND SHOULD NOT BE USED WITHOUT WRITTEN PERMISSION

DIMENSION UNITS	SCALE
mm	4:1

GENERAL TOLERANCES (UNLESS SPECIFIED)

ANGULAR TOL	±	1.0 °
4 PLACES	±	
3 PLACES	±	
2 PLACES	±	0.1
1 PLACE	±	0.2
0 PLACES	±	

DRAFT WHERE APPLICABLE MUST REMAIN WITHIN DIMENSIONS

CURRENT REV DESC:

EC NO: 171650
DRWN: DDEB 2018/01/19
CHK'D: MVANSLAMBROU 2018/02/16
APPR: MVANSLAMBROU 2018/02/16

INITIAL REVISION:
DRWN: APROFFITT 2014/05/14
APPR: VKOSHY 2014/06/27

THIRD ANGLE PROJECTION | DRAWING: A1-SIZE | SERIES: 33472

molex

MX150 RCPT
DUAL ROW SEALED ASSEMBLY MAT SEAL

PRODUCT CUSTOMER DRAWING

DOCUMENT NUMBER	DOC TYPE	DOC PART	REVISION
SD-33472-0001	PSD	001	C2

MATERIAL NUMBER	CUSTOMER	SHEET NUMBER
	GENERAL MARKET	7 OF 11

DOCUMENT STATUS	P1	RELEASE DATE	2018/02/16 22:02:25

FORMAT: molex-tb-print-A1-
DEFINITION: 1
DATE: 2017/10/06

SHEET DESCRIPTION
MOLEX BACKSHELL

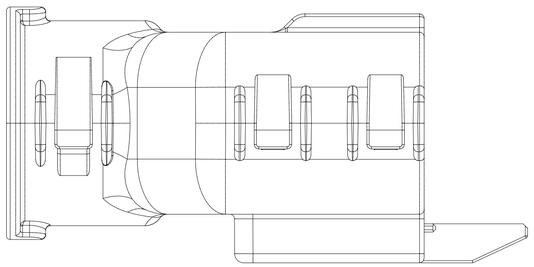

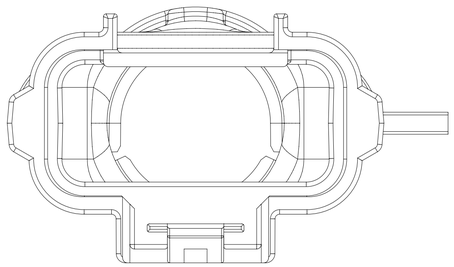

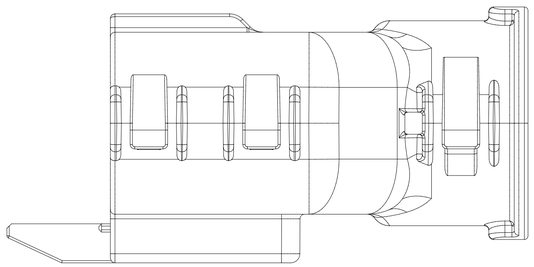

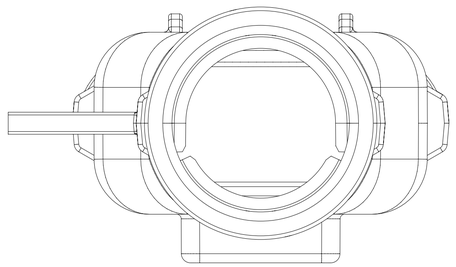

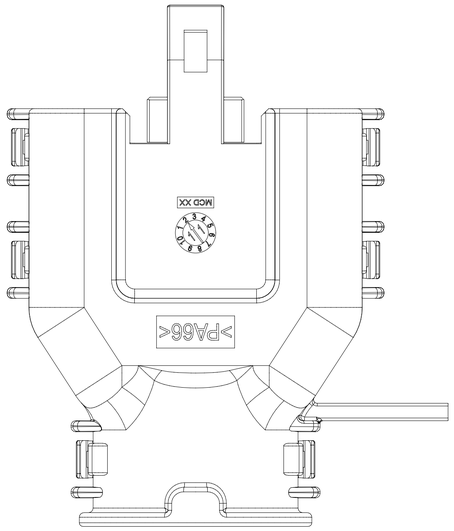

SYMBOLS	
= 0	
= 0	
= 0	
= 0	
= 0	
= 0	
= 0	
= 0	
= 0	

THIS DRAWING CONTAINS INFORMATION THAT IS PROPRIETARY TO MOLEX ELECTRONIC TECHNOLOGIES, LLC AND SHOULD NOT BE USED WITHOUT WRITTEN PERMISSION

DIMENSION UNITS	SCALE
mm	3:1

GENERAL TOLERANCES (UNLESS SPECIFIED)

ANGULAR TOL	±	1.0 °
4 PLACES	±	
3 PLACES	±	
2 PLACES	±	0.1
1 PLACE	±	0.2
0 PLACES	±	

DRAFT WHERE APPLICABLE MUST REMAIN WITHIN DIMENSIONS

CURRENT REV DESC:

EC NO: 171650
DRWN: DDEB 2018/01/19
CHK'D: MVANSLAMBROU 2018/02/16
APPR: MVANSLAMBROU 2018/02/16

INITIAL REVISION:
DRWN: APROFFITT 2014/05/14
APPR: VKOSHY 2014/06/27

THIRD ANGLE PROJECTION | DRAWING: A1-SIZE | SERIES: 33472

molex

MX150 RCPT
DUAL ROW SEALED ASSEMBLY MAT SEAL

PRODUCT CUSTOMER DRAWING

DOCUMENT NUMBER	DOC TYPE	DOC PART	REVISION
SD-33472-0001	PSD	001	C2

MATERIAL NUMBER	CUSTOMER	SHEET NUMBER
	GENERAL MARKET	8 OF 11

DOCUMENT STATUS	P1	RELEASE DATE	2018/02/16 22:02:25

FORMAT: molex-tb-prod-A1-
DRAWING: 31
DATE: 2017/10/04

SHEET DESCRIPTION
SCHLEMMER BACKSHELL CONFIGURATIONS

CHARTED DIMENSIONS	
DESCRIPTION	DIMENSIONS
	H
2X3 W/ CLIPSLOT	N/A
2X3 W/O CLIPSLOT	28.50
2X4 W/ CLIPSLOT	N/A
2X4 W/O CLIPSLOT	30.75
2X6 W/ CLIPSLOT	N/A
2X6 W/O CLIPSLOT	35.83

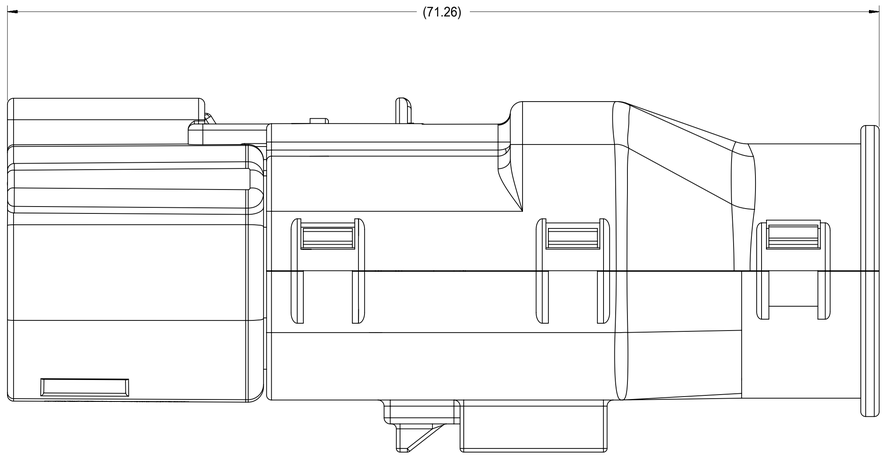

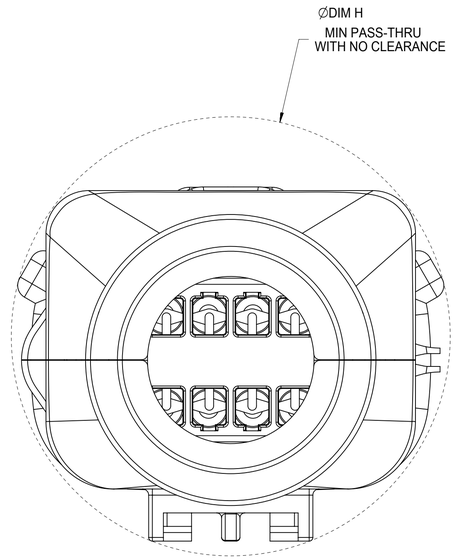

RECEPTACLE SEALED ASSEMBLY WITH RECEPTACLE BACKSHELL

RELEASE STATUS	P1	RELEASE DATE	2018/02/16 22:02:25

QUALITY SYMBOLS	
FA	= 0
FC	= 0
FP	= 0
▼	= 0
C	= 0
☒	= 0
■	= 0
G	= 0

THIS DRAWING CONTAINS INFORMATION THAT IS PROPRIETARY TO MOLEX ELECTRONIC TECHNOLOGIES, LLC AND SHOULD NOT BE USED WITHOUT WRITTEN PERMISSION

EC NO: 171650 2018/01/19
DRWN: DDEB 2018/02/16
CHK'D: MVANSLAMBROU 2018/02/16
APPR: MVANSLAMBROU

GENERAL TOLERANCES (UNLESS SPECIFIED)		
ANGULAR TOL	±	1.0 °
4 PLACES	±	
3 PLACES	±	
2 PLACES	±	0.1
1 PLACE	±	0.2
0 PLACES	±	

DRAFT WHERE APPLICABLE MUST REMAIN WITHIN DIMENSIONS

REV: C2

DIMENSION UNITS	SCALE
mm	4:1
DRWN BY: APROFFITT	DATE: 2014/05/14
CHK'D BY: KBORUSZEWSKI	DATE: 2014/06/16
APPR BY: VKOSHY	DATE: 2014/06/27
DRAWING SIZE: A1	THIRD ANGLE PROJECTION

molex®

MX150 RCPT
DUAL ROW SEALED ASSEMBLY MAT SEAL

PRODUCT CUSTOMER DRAWING

SERIES	MATERIAL NUMBER	CUSTOMER
33472		GENERAL MARKET

DOCUMENT NUMBER	DOC TYPE	DOC PART	SHEET NUMBER
SD-33472-0001	PSD	001	9 OF 11

TEMPLATE: 11x8SHEET.DWT
REVISION: D
DATE: 2017/10/05

SHEET DESCRIPTION
MOLEX BACKSHELL CONFIGURATIONS

RECEPTACLE SEALED ASSEMBLY WITH RECEPTACLE BACKSHELL

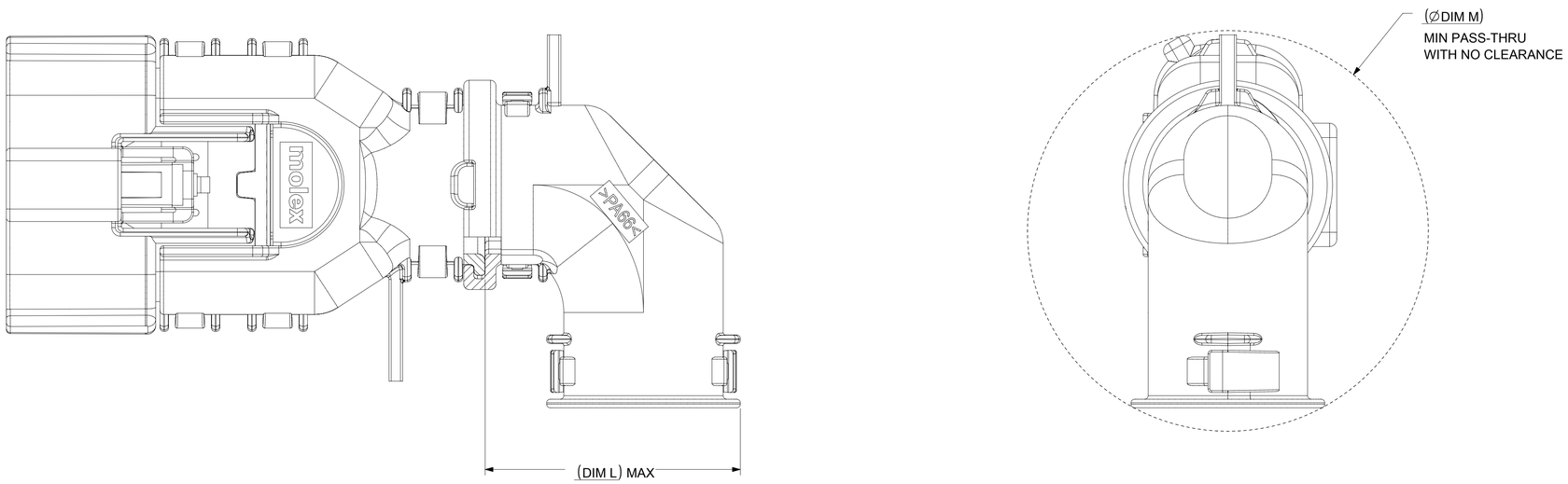

ADD THE VALUE OF 'L' TO THE TOTAL DIMENSION
WHENEVER ADAPTOR IS USED

CHARTED DIMENSIONS

	DESCRIPTION	DIMENSIONS			
		J	K	L	M
	2X2 W/O CLIPSLOT	TBD	TBD	TBD	TBD
B	2X2 W/ CLIP SLOT	TBD	TBD	TBD	TBD
	2X2 LENGTHENED	TBD	TBD	TBD	TBD
	2X4 W/ CLIPSLOT	58.39	32.85	32.10	44.26
	2X4 W/O CLIPSLOT	N/A	N/A	N/A	N/A
	2X8 W/ CLIPSLOT	67.19	42.65	36.10	56.49
B	2X8 W/O CLIPSLOT	N/A	N/A	N/A	N/A
	2X10 W/ CLIPSLOT	67.19	42.65	36.10	56.49
C	2X10 W/O CLIPSLOT	N/A	N/A	N/A	N/A

SYMBOLS	
A	= 0
E	= 0
F	= 0
S	= 0
	= 0
C	= 0
	= 0
	= 0
V	= 0

THIS DRAWING CONTAINS INFORMATION THAT IS PROPRIETARY TO MOLEX ELECTRONIC TECHNOLOGIES, LLC AND SHOULD NOT BE USED WITHOUT WRITTEN PERMISSION

DIMENSION UNITS	SCALE
mm	2.5:1

GENERAL TOLERANCES (UNLESS SPECIFIED)

ANGULAR TOL	±	1.0 °
4 PLACES	±	
3 PLACES	±	
2 PLACES	±	0.1
1 PLACE	±	0.2
0 PLACES	±	

DRAFT WHERE APPLICABLE MUST REMAIN WITHIN DIMENSIONS

CURRENT REV DESC:

EC NO:	171650	
DRWN:	DDEB	2018/01/19
CHK'D:	MVANSLAMBROU	2018/02/16
APPR:	MVANSLAMBROU	2018/02/16

INITIAL REVISION:

DRWN:	APROFFITT	2014/05/14
APPR:	VKOSHY	2014/06/27

THIRD ANGLE PROJECTION

DRAWING	SERIES
A1-SIZE	33472

molex

MX150 RCPT
DUAL ROW SEALED ASSEMBLY MAT SEAL

PRODUCT CUSTOMER DRAWING

DOCUMENT NUMBER	DOC TYPE	DOC PART	REVISION
SD-33472-0001	PSD	001	C2

MATERIAL NUMBER	CUSTOMER	SHEET NUMBER
	GENERAL MARKET	10 OF 11

DOCUMENT STATUS	P1	RELEASE DATE	2018/02/16 22:02:25

TEMPLATE: master-tb-portrait.t
PDM NAME: 33472-0001
DATE: 2017-10-06

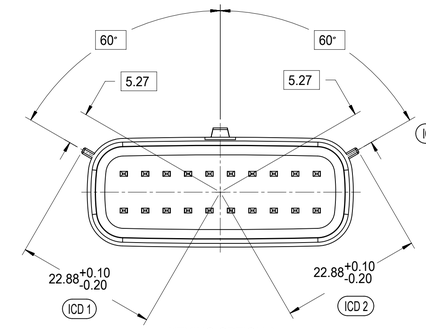

KEYING OPTION A
SCALE 4:1

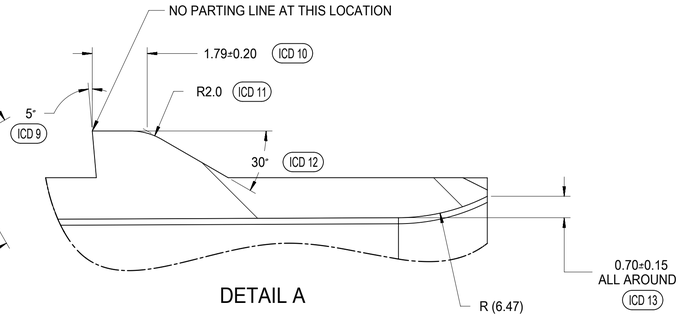

DETAIL A
SCALE 10:1

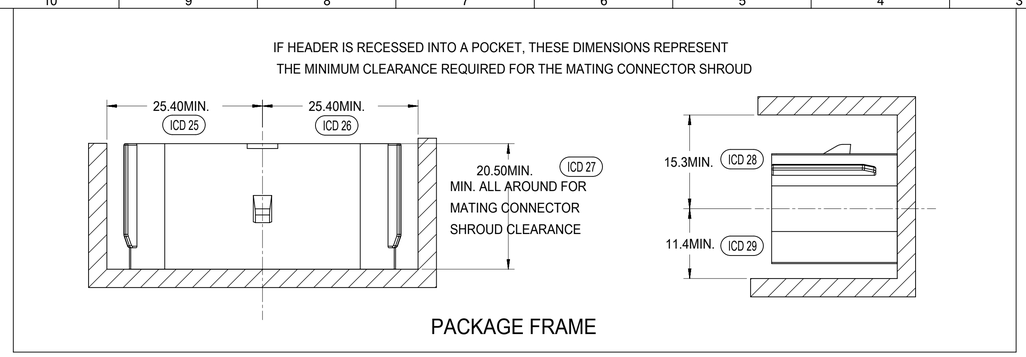

PACKAGE FRAME

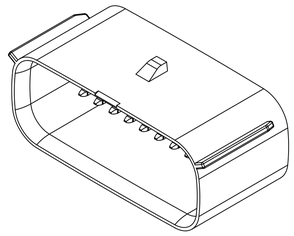

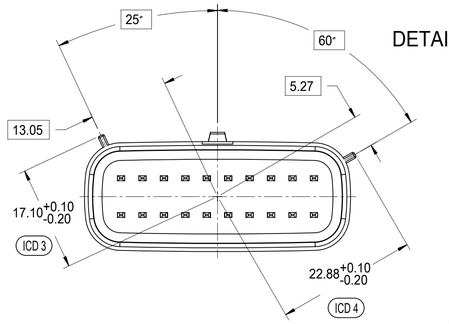

KEYING OPTION B
SCALE 4:1

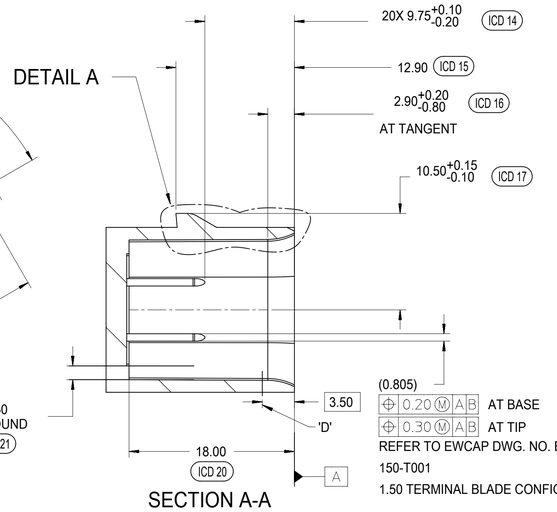

REFER TO EWCAP DWG. NO. EWCAP-001
150-T001
1.50 TERMINAL BLADE CONFIGURATION

SECTION A-A

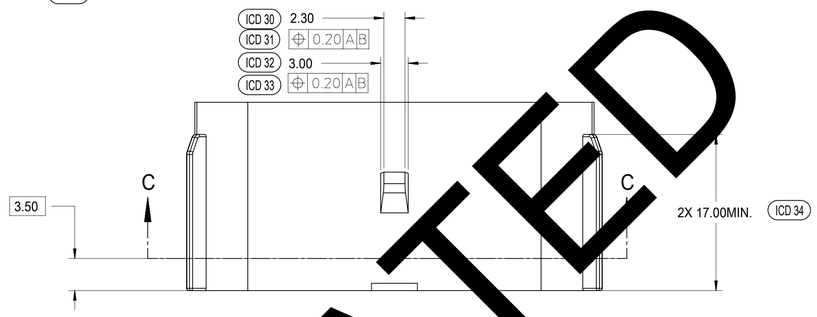

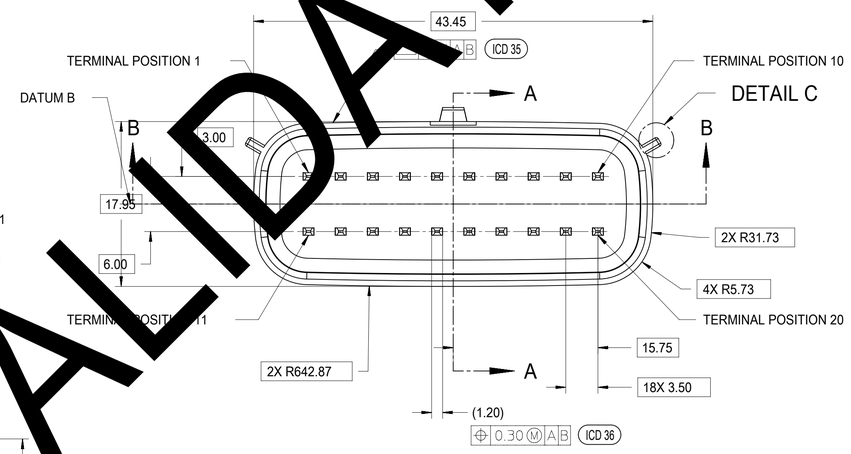

REFER TO EWCAP DWG. NO. EWCAP-001
150-T001
1.50 TERMINAL BLADE CONFIGURATION

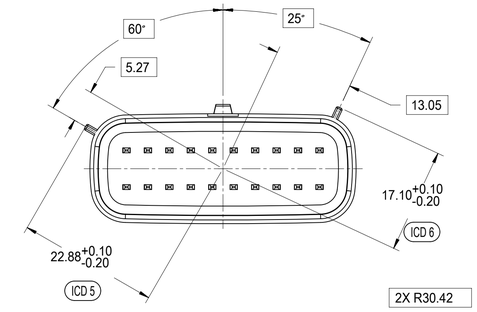

KEYING OPTION C
SCALE 4:1

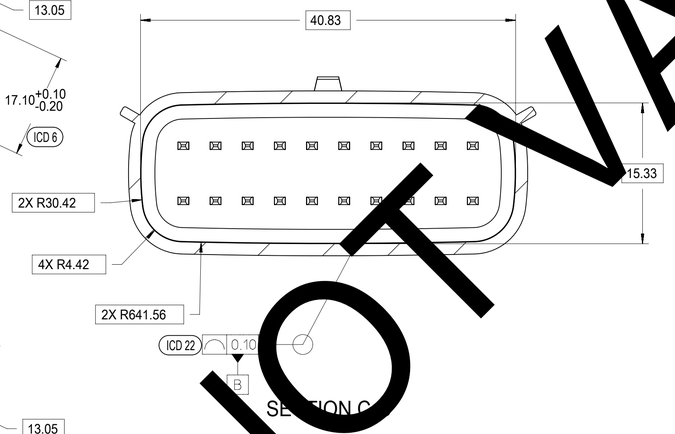

SECTION C

SURFACE MUST BE FREE
OF SURFACE DEFECTS AND
PARTING LINES FOR
SEALING ALL AROUND

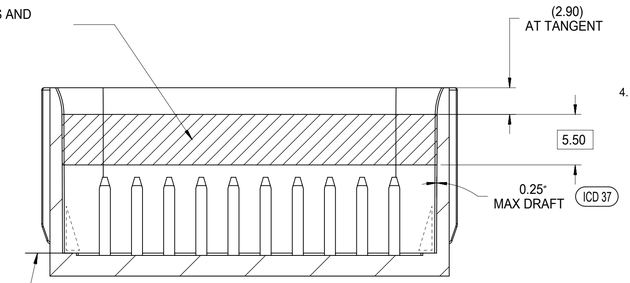

SECTION B-B

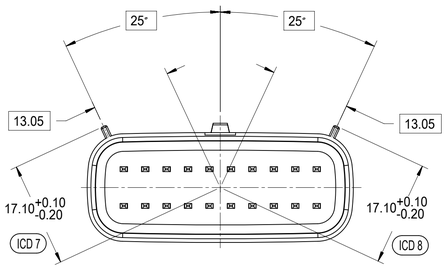

KEYING OPTION D
SCALE 4:1

CONSTRUCTION BELOW THIS SURFACE IS
NOT CONTROLLED BY EWCAP. NO PLASTIC
FEATURES MAY EXTEND ABOVE THIS SURFACE.

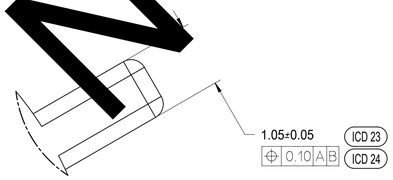

DETAIL C
SCALE 20:1
APPLIES 2X
SEE KEYING OPTION VIEWS
FOR POSITIONS

MATING INTERFACE NOTES: VALID UNLESS OTHERWISE SPECIFIED

1. GENERAL:
   a. DESIGNED TO MATE WITH MOLEX CONNECTOR 33472-2XXX & 160008-0XXX & 160074-0XXX
      A FULL SHROUD ON THE MATING CONNECTOR IS REQUIRED TO INSURE THAT THE CONNECTOR-HEADER POLARIZATION FEATURES (OPTIONS A THRU D) WILL FUNCTION. THE FULL SHROUD ALSO PREVENTS SCOOP DAMAGE TO THE HEADER PINS. REFER TO 'SAE/USCAR-12 CONNECTOR DESIGN GUIDE LINES' FOR ADDITIONAL INFORMATION
   b. PARTS MUST BE IN COMPLIANCE TO MOLEX CHEMICAL SUBSTANCES FOR PRODUCTS AND PACKAGING SPECIFICATION: ES-40000-5016
   c. FLAMMABILITY REQUIREMENT: PER ISO3795 OR GM3191
      1. BURN RATE 100mm/MIN MAXIMUM
      2. MATERIAL MUST BE SELF EXTINGUISHING

2. MATERIALS:
   a. MATERIAL: SPS/NYLON GF20, REGRIND 20% MAX BY WEIGHT
   b. STANDARD COLORS FOR POLARIZATION (SEE KEYING OPTIONS TABLE). DEVIATION REQUIRES APPROVAL OF AUTHORIZED PERSON
   c. FOR BLADE BASE MATERIAL, PLATING AND PROCESS LUBRICANT:
      1. TIN: - BASE MATERIAL:COPPER ALLOY, CONDUCTIVITY >=60% IACS AT 20°C;
         TENSILE STRENGTH >= 410 N/mm²P - BARRIER MATERIAL: NICKEL DEPOSIT FROM NICKEL SULFAMATE PLATING SOLUTION W/O ANY ADDITIVES
         THICKNESS: 1.25 - 2.25 MICROMETERS
         - TOP LAYER: 100% ELECTRO-DEPOSITED TIN, MATTE FINISH
         THICKNESS: 2.5 - 4.0 MICROMETERS
      2. SILVER: - BARRIER MATERIAL: ELECTRO-DEPOSITED DUCTILE SULPHAMATE NICKEL
         THICKNESS: 1.25 - 2.25 MICROMETERS
         - TOP LAYER: ELECTRO-DEPOSITED SEMI-BRIGHT PURE SILVER (0.5% MAX IMPURITIES) OVER NICKEL ANTI-TARNISH TREATMENT EVERBRIGHT WS
         THICKNESS: 1.9 - 3.3 MICROMETERS
      3. BLADES MUST CONFORM TO ES-40000-5007, EXCEPT FOR SPECULAR REFLECTIVITY - SECTION 6.0
      4. ANY PROCESS LUBRICANT REMAINING ON THE TERMINAL MUST NOT VARNISH OR DEGRADE IT'S ELECTRICAL PERFORMANCE UP TO A MAXIMUM CLASS AMBIENT TERMPERATURE PER SAE USCAR-2 FOR 1008 HOURS, PROCESS LUBRICANTS SHOULD BE APPROVED BY THE RESPONSIBLE ENGINEER.
      5. INFORMATION FOR BLADE DESIGN WAS DEVELOPED FROM EWCAP DWG: EWCAP-001

3. GEOMETRY:
   a. THIS IS A 100% CAD GENERATED PART. THE CAD MATHEMATICAL DATA IS THE MASTER FOR THIS PART. FOR DIMENSIONAL OR ANY INFORMATION NOT SHOWN ON THIS DRAWING, ANALYZE THE CAD MODEL.
   b. GEOMETRIC DIMENSIONS AND TOLERANCES PER ASME Y14.5M - 1994
   c. GENERAL TOLERANCES: SEE TITLE BLOCK
   d. EDGES AND UNDIMENSIONED DETAILS PER ISO13715

4. MANUFACTURING:
   a. DRAFT TO BE WITHIN TOLERANCE.
      PLUS DRAFT - INDICATES A DIMENSION REPRESENTS THE SMALLEST SIZE OF A FEATURE. DRAFT WILL ADD MATERIAL.
      MINUS DRAFT - INDICATES A DIMENSION REPRESENTS THE LARGEST SIZE OF A FEATURE. DRAFT WILL REMOVE MATERIAL.
   b. ALLOWABLE FLASH MAX 0.20 HIGH BY MAX 0.13 THICK.
   c. ALLOWABLE SPLIT/PARTING LINE MISMATCH 0.2 MAX.
   d. VISUAL DEFECTS SHALL MEET COSMETIC STANDARD PS-45499-002 (Class B)
   e. NO EXTERNAL MOLD RELEASE AGENT ALLOWED DURING MANUFACTURING
   f. NO PARTING LINES, NO DRAFT, MISMATCHES OR EJECTOR MARKS PERMISSIBLE WITHIN SEALING SURFACE. SEALING SURFACE TOOLING TO BE PROCESSED TO A SURFACE FINISH OF NTMA #70 (400 PAPER) MINIMUM.

P/N	OPTION	MATING CONNECTOR COLOR
150-S-020-2-D02	D	STONE GRAY
150-S-020-2-C02	C	DK GRAY
150-S-020-2-B02	B	LT GRAY
150-S-020-2-A02	A	BLACK

DOCUMENT STATUS	P1	RELEASE DATE	2018/02/16 22:02:25

SYMBOLS	
F = 0	
C = 0	
P = 0	
S = 0	
= 0	
C = 0	
= 0	
= 0	
= 0	

DIMENSION UNITS	SCALE
mm	1:1

GENERAL TOLERANCES (UNLESS SPECIFIED)		
ANGULAR TOL	±	1.0 °
4 PLACES	±	
3 PLACES	±	
2 PLACES	±	0.1
1 PLACE	±	0.2
0 PLACES	±	

DRAFT WHERE APPLICABLE MUST REMAIN WITHIN DIMENSIONS

THIS DRAWING CONTAINS INFORMATION THAT IS PROPRIETARY TO MOLEX ELECTRONIC TECHNOLOGIES, LLC AND SHOULD NOT BE USED WITHOUT WRITTEN PERMISSION

CURRENT REV DESC:

EC NO:	171650	
DRWN:	DDEB	2018/01/19
CHK'D:	MVANSLAMBROU	2018/02/16
APPR:	MVANSLAMBROU	2018/02/16

INITIAL REVISION:

DRWN:	APROFFITT	2014/05/14
APPR:	VKOSHY	2014/06/27

THIRD ANGLE PROJECTION | DRAWING: A1-SIZE | SERIES: 33472

molex

MX150 RCPT
DUAL ROW SEALED ASSEMBLY MAT SEAL

PRODUCT CUSTOMER DRAWING

DOCUMENT NUMBER	DOC TYPE	DOC PART	REVISION
SD-33472-0001	PSD	001	C2

MATERIAL NUMBER	CUSTOMER	SHEET NUMBER
	GENERAL MARKET	11 OF 11

NOT VALIDATED

TABLE OF CONTENTS

SHEET NO.	SHEET DESCRIPTION
1	NOTES AND BOM
2	CONFIGURATIONS
3-4	KEY CONFIGURATIONS
5	BLADE SEALED ASSEMBLY
6	SYSTEM PACKAGING
7	BACKSHELL NOTES
8	BACKSHELL
9	BACKSHELL CONFIGURATIONS

NOTES: VALID UNLESS OTHERWISE SPECIFIED

1. GENERAL:
a. APPLICATION SPECIFICATION SEE: AS-33472-100
-CONTAINS: PRODUCT INTRODUCTION, PRODUCT SUMMARY, CONNECTOR ASSEMBLY, PACKAGING INFORMATION, CONNECTOR MATING, SERVICE INSTRUCTIONS, ELECTRICAL CONTINUITY CHECKING, CRIMPING, AND TROUBLESHOOTING.
-DESIGNED TO MATE WITH RECEPTACLE SEALED ASSEMBLY AS SPECIFIED IN THE MATING CONNECTOR DRAWINGS CHART.
*DENOTES DRAWINGS THAT CAN BE ACCESSED AT <http://ewcap.uscarteams.org/>.
-ASSEMBLY SHIPPED WITH PLR IN PRE-LOCK POSITION (SEE PLR PRE-LOCK VIEW SHEET 5).

b. PRODUCT SPECIFICATION SEE:
-STANDARD CONFIGURATION: PS-33472-000
-UL V0 CONFIGURATION: TBD
CONTAINS: PRODUCT INTRODUCTION, PRODUCT SUMMARY, RATINGS (CURRENT, TEMPERATURE, SEALING, AND FLAMMABILITY), TERMINALS, WIRE DIAMETER RANGE, PRODUCT VALIDATION, AND PRODUCT DEVIATIONS.
c. PACKAGING SPECIFICATION PER MOLEX DRAWING: PK-31300-635
d. PARTS MUST BE IN COMPLIANCE TO MOLEX CHEMICAL SUBSTANCES FOR PRODUCTS AND PACKAGING SPECIFICATION: QEHS-699000-300
e. DATA MUST BE SUBMITTED UNDER THE MOLEX PART NUMBER TO IMDS (COMPANY ID#13255)

2. DESIGN - MATERIALS:
a. FOR BILL OF MATERIALS SEE:
-STANDARD CONFIGURATION: SD-33482-0002
-UL V0 CONFIGURATION: SD-160084-0002

3. DESIGN - GEOMETRY:
a. THE 3-D CAD DATA IS BASIC (WITHOUT TOLERANCE) AND MASTER FOR THIS PART WITH THE EXCEPTION OF UNDERLINED DIMENSIONS. DIMENSIONAL INFORMATION NOT SHOWN ON THIS DRAWING IS DEFINED BY THE DATA FILE AT ITS LATEST REVISION.
b. GEOMETRIC DIMENSIONS AND TOLERANCES PER ASME Y14.5M-2009
c. EDGES AND UNDIMENSIONED DETAILS PER ISO13715
d. CORNERS SHOWN AS SHARP TO BE R 0.2 MAX.
e. LETTERING SHALL BE 0.15 MAX RAISED IN 0.25 MAX RECESS PAD. THIS INCLUDES RECYCLING CODE, CAVITY ID, VENDOR IDENTIFICATION, AND CUSTOMER MATERIAL NUMBER.
f. VISUAL DEFECTS SHALL MEET COSMETIC STANDARD PS-45499-002 (Class B).
g. LASER MARKING:
1. PART NUMBER
2. DAY OF THE YEAR
3. SHIFT
4. YEAR
FOR ADDITIONAL INFORMATION SEE SECTION 5 UNDER PROCEDURES IN ES-34735-008.

MATING CONNECTOR DRAWINGS

DESCRIPTION	MOLEX INLINE
2X2	SD-33472-0001
2X3	SD-33472-0001
2X4	SD-33472-0001
2X6	SD-33472-0001
2X8	SD-33472-0001
2X10	SD-33472-0001

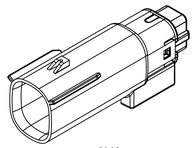
2X2

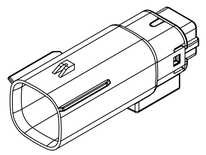
2X3

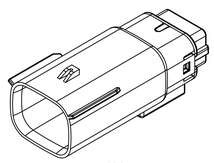
2X4

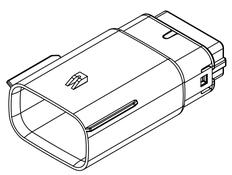
2X6

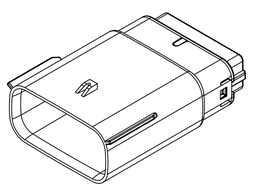
2X8

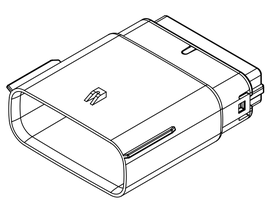
2X10

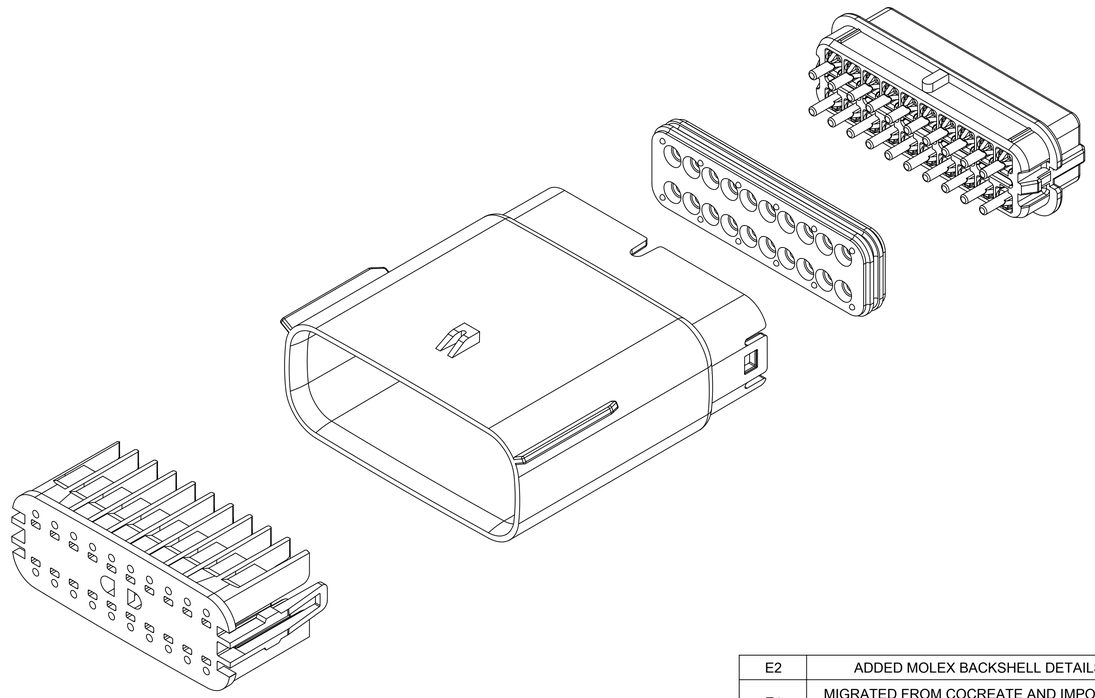

INSPECTION NUMBER LOG
LAST NUMBER: 9 ADDED: REMOVED:

REV	REV DESCRIPTION
E2	ADDED MOLEX BACKSHELL DETAILS
E1	MIGRATED FROM COCREATE AND IMPORTED DXF FILES
E	ADDED CHARTED DIMENSIONS FOR 2X2, 2X4, 2X6 AND 2X8 WITH CLIPSLOT
D	MINOR GEOMETRY CHANGE FOR UL V0
C3	ADD 2X4
C2	ADD 2X3
C1	ADD UL V0 CONFIGURATIONS
C	ADD 2X8
B1	ADD 2X6 BACKSHELL INFO
B	ADD 2X6
A	INITIAL RELEASE

SYMBOLS: A = 0, C = 0, F = 0, S = 0, ▼ = 0, C = 0, ☒ = 0, ■ = 0, = 0

THIS DRAWING CONTAINS INFORMATION THAT IS PROPRIETARY TO MOLEX ELECTRONIC TECHNOLOGIES, LLC AND SHOULD NOT BE USED WITHOUT WRITTEN PERMISSION

DIMENSION UNITS	SCALE
mm	1.5:1

GENERAL TOLERANCES (UNLESS SPECIFIED)		
ANGULAR TOL	±	1.0 °
4 PLACES	±	
3 PLACES	±	
2 PLACES	±	0.1
1 PLACE	±	0.2
0 PLACES	±	

DRAFT WHERE APPLICABLE MUST REMAIN WITHIN DIMENSIONS

CURRENT REV DESC:

EC NO: 171650
DRWN: PMANJUNATHAC 2018/01/03
CHK'D: MVANSLAMBROU 2018/02/16
APPR: MVANSLAMBROU 2018/02/16

INITIAL REVISION:
DRWN: APROFFITT 2014/04/28
APPR: VKOSHY 2014/05/14

THIRD ANGLE PROJECTION | DRAWING: A1-SIZE | SERIES: 33482

molex

MX150 BLADE
DUAL ROW SEALED ASSEMBLY MAT SEAL

PRODUCT CUSTOMER DRAWING

DOCUMENT NUMBER	DOC TYPE	DOC PART	REVISION
SD-33482-0001	PSD	001	E2

MATERIAL NUMBER | CUSTOMER: GENERAL MARKET | SHEET NUMBER: 1 OF 11

DOCUMENT STATUS	P1	RELEASE DATE	2018/02/16 22:02:26

SHEET DESCRIPTION
CONFIGURATIONS

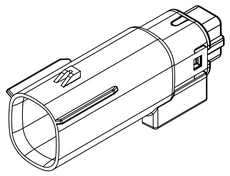

2X2 - STANDARD (STD)

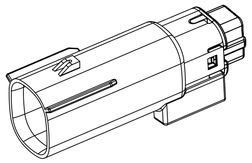

2X2 - UL V0*

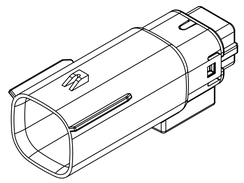

2X3 - STANDARD (STD)

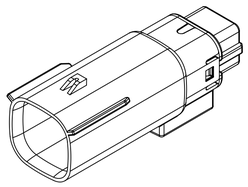

2X3 - LENGTHENED

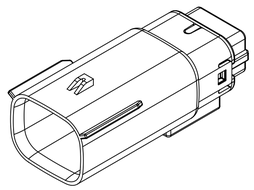

2X4 - STANDARD (STD)

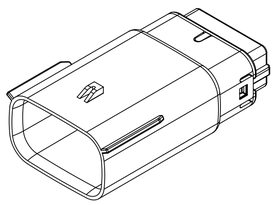

2X6 - STANDARD (STD)

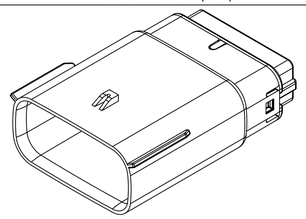

2X8 - STANDARD (STD)

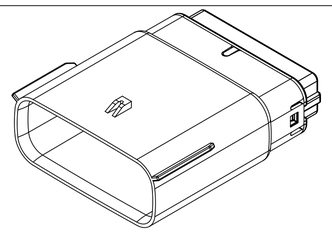

2X10 - STANDARD (STD)

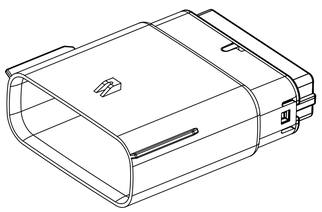

2X10 - UL V0*

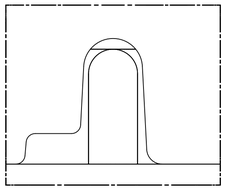

UL V0 UNIQUE FEATURE

Partial1

SCALE 10:1

* MINOR GEOMETRY CHANGE THAN STANDARD CONFIGURATION.
SEE NOTE 2a FOR MORE INFORMATION

DOCUMENT STATUS	P1	RELEASE DATE	2018/02/16 22:02:26

SYMBOLS: A = 0, C = 0, E = 0, S = 0, ▼ = 0, C = 0, ☒ = 0, ■ = 0, V = 0

THIS DRAWING CONTAINS INFORMATION THAT IS PROPRIETARY TO MOLEX ELECTRONIC TECHNOLOGIES, LLC AND SHOULD NOT BE USED WITHOUT WRITTEN PERMISSION

DIMENSION UNITS	SCALE
mm	1.5:1

GENERAL TOLERANCES (UNLESS SPECIFIED)

ANGULAR TOL	±	1.0 °
4 PLACES	±	
3 PLACES	±	
2 PLACES	±	0.1
1 PLACE	±	0.2
0 PLACES	±	

DRAFT WHERE APPLICABLE MUST REMAIN WITHIN DIMENSIONS

CURRENT REV DESC:

EC NO: 171650
DRWN: PMANJUNATHAC 2018/01/03
CHK'D: MVANSLAMBROU 2018/02/16
APPR: MVANSLAMBROU 2018/02/16

INITIAL REVISION:
DRWN: APROFFITT 2014/04/28
APPR: VKOSHY 2014/05/14

THIRD ANGLE PROJECTION | DRAWING: A1-SIZE | SERIES: 33482

molex

MX150 BLADE
DUAL ROW SEALED ASSEMBLY MAT SEAL

PRODUCT CUSTOMER DRAWING

DOCUMENT NUMBER	DOC TYPE	DOC PART	REVISION
SD-33482-0001	PSD	001	E2

MATERIAL NUMBER	CUSTOMER	SHEET NUMBER
	GENERAL MARKET	2 OF 11

SHEET DESCRIPTION
KEY CONFIGURATIONS

2X2

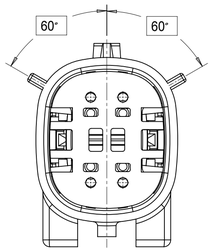

KEY A

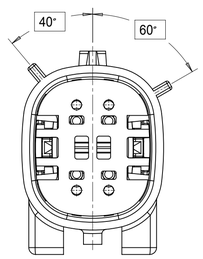

KEY B

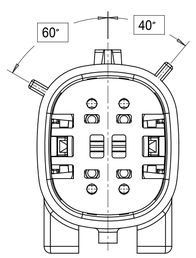

KEY C

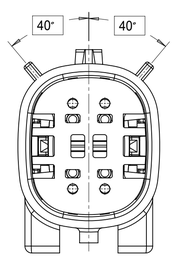

KEY D

2X3

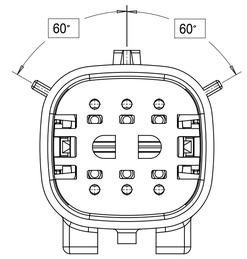

KEY A

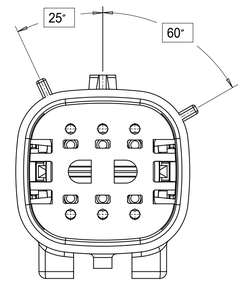

KEY B

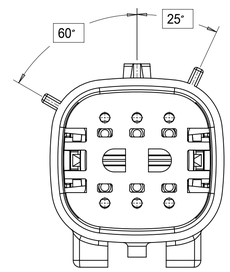

KEY C

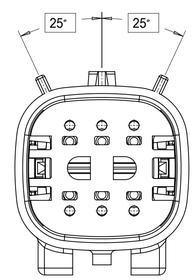

KEY D

2X4

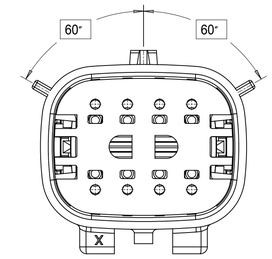

KEY A

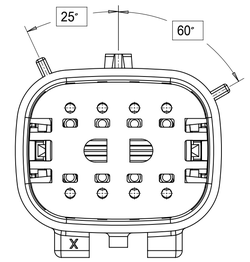

KEY B

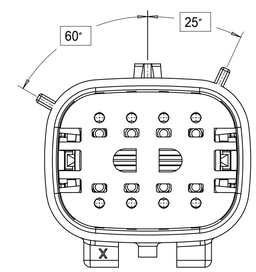

KEY C

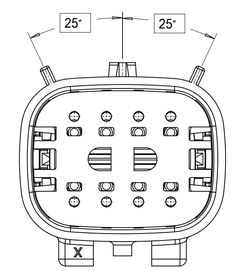

KEY D

SYMBOLS
= 0
= 0
= 0
= 0
= 0
= 0
= 0
= 0
= 0

THIS DRAWING CONTAINS INFORMATION THAT IS PROPRIETARY TO MOLEX ELECTRONIC TECHNOLOGIES, LLC AND SHOULD NOT BE USED WITHOUT WRITTEN PERMISSION

DIMENSION UNITS	SCALE
mm	3:1

GENERAL TOLERANCES (UNLESS SPECIFIED)		
ANGULAR TOL	±	1.0 °
4 PLACES	±	
3 PLACES	±	
2 PLACES	±	0.1
1 PLACE	±	0.2
0 PLACES	±	

DRAFT WHERE APPLICABLE MUST REMAIN WITHIN DIMENSIONS

CURRENT REV DESC:

EC NO: 171650
DRWN: PMANJUNATHAC 2018/01/03
CHK'D: MVANSLAMBROU 2018/02/16
APPR: MVANSLAMBROU 2018/02/16

INITIAL REVISION:
DRWN: APROFFITT 2014/04/28
APPR: VKOSHY 2014/05/14

THIRD ANGLE PROJECTION | DRAWING: A1-SIZE | SERIES: 33482

molex

MX150 BLADE
DUAL ROW SEALED ASSEMBLY MAT SEAL

PRODUCT CUSTOMER DRAWING

DOCUMENT NUMBER	DOC TYPE	DOC PART	REVISION
SD-33482-0001	PSD	001	E2

MATERIAL NUMBER	CUSTOMER	SHEET NUMBER
	GENERAL MARKET	3 OF 11

DOCUMENT STATUS	P1	RELEASE DATE	2018/02/16 22:02:26

COPYRIGHT, creation rev.(c)=A.C.
REPORT NUMBER: 1k
DATE: 2017/10/09

SHEET DESCRIPTION
KEY CONFIGURATIONS CONT.

2X6

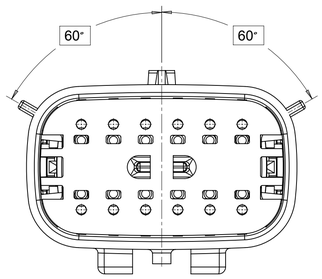

KEY A

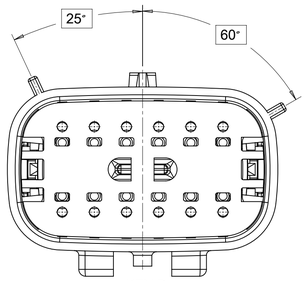

KEY B

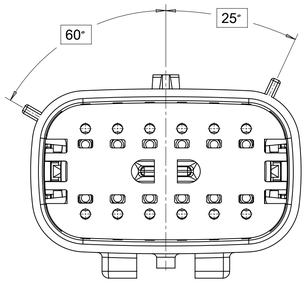

KEY C

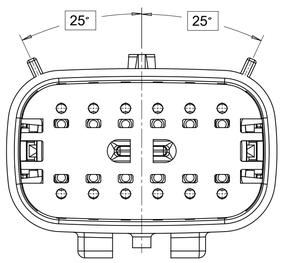

KEY D

2X8

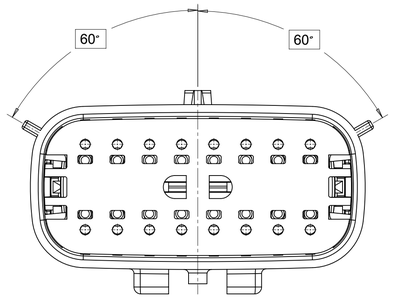

KEY A

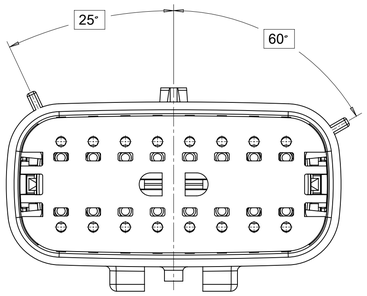

KEY B

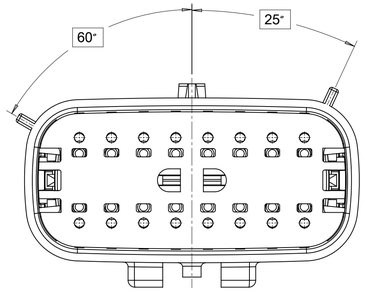

KEY C

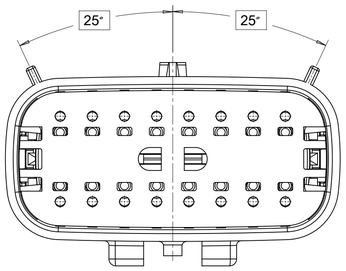

KEY D

2X10

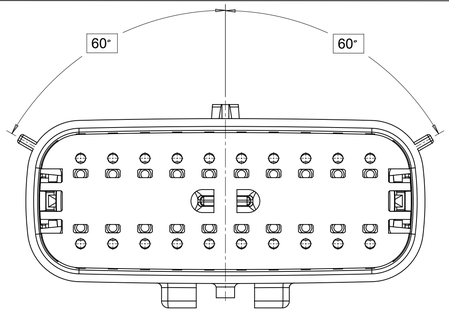

KEY A

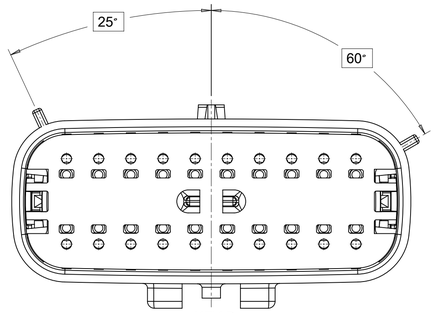

KEY B

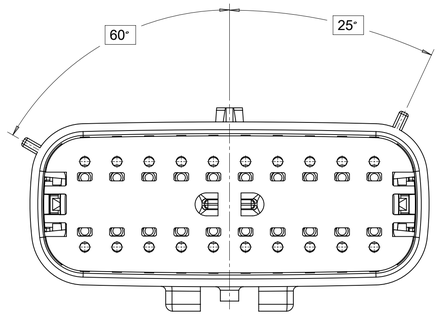

KEY C

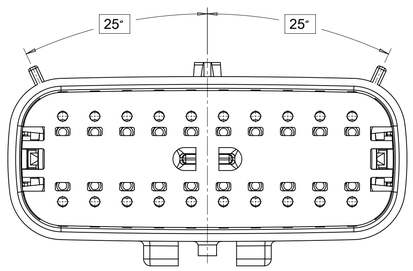

KEY D

SYMBOLS
= 0
= 0
= 0
= 0
= 0
= 0
= 0
= 0
= 0

THIS DRAWING CONTAINS INFORMATION THAT IS PROPRIETARY TO MOLEX ELECTRONIC TECHNOLOGIES, LLC AND SHOULD NOT BE USED WITHOUT WRITTEN PERMISSION

DIMENSION UNITS	SCALE
mm	3:1

GENERAL TOLERANCES (UNLESS SPECIFIED)		
ANGULAR TOL	±	1.0 °
4 PLACES	±	
3 PLACES	±	
2 PLACES	±	0.1
1 PLACE	±	0.2
0 PLACES	±	

DRAFT WHERE APPLICABLE MUST REMAIN WITHIN DIMENSIONS

CURRENT REV DESC:

EC NO: 171650
DRWN: PMANJUNATHAC 2018/01/03
CHK'D: MVANSLAMBROU 2018/02/16
APPR: MVANSLAMBROU 2018/02/16

INITIAL REVISION:
DRWN: APROFFITT 2014/04/28
APPR: VKOSHY 2014/05/14

THIRD ANGLE PROJECTION | DRAWING: A1-SIZE | SERIES: 33482

molex

MX150 BLADE
DUAL ROW SEALED ASSEMBLY MAT SEAL

PRODUCT CUSTOMER DRAWING

DOCUMENT NUMBER	DOC TYPE	DOC PART	REVISION
SD-33482-0001	PSD	001	E2

MATERIAL NUMBER	CUSTOMER	SHEET NUMBER
	GENERAL MARKET	4 OF 11

DOCUMENT STATUS	P1	RELEASE DATE	2018/02/16 22:02:26

COPYRIGHT - creation date (yyyy-m-d) :
REV-DATE: 1x
DATE: 2017/10/06

SHEET DESCRIPTION
BLADE SEALED ASSEMBLY

CHARTED DIMENSION					
DESCRIPTION	DIMENSIONS				
	A	B	C	D	E
2X2	15.54	1.75	24.40	54.45	22.23
2X3 STANDARD	19.04	3.50	26.21	54.45	22.23
2X3 LENGTHENED	19.04	3.50	26.21	56.45	22.23
2X4	22.54	1.75	27.21	54.45	22.23
2X6	29.54	1.75	32.27	54.45	22.23
2X8	36.54	1.75	38.88	54.45	22.23
2X10	43.64	1.75	45.65	54.45	22.05

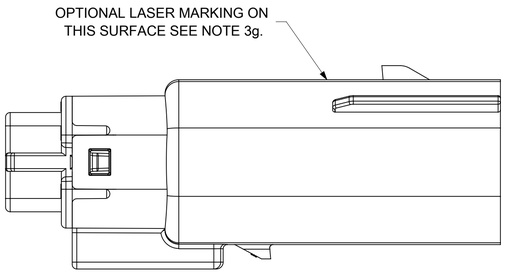

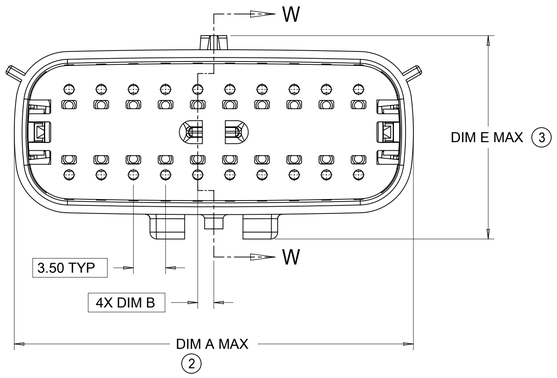

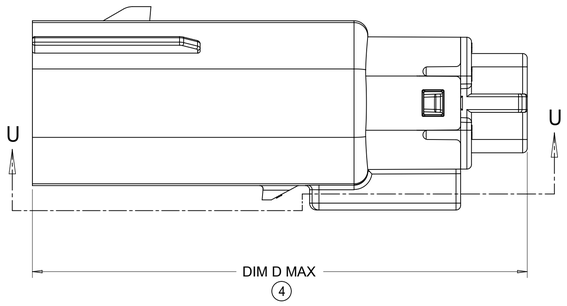

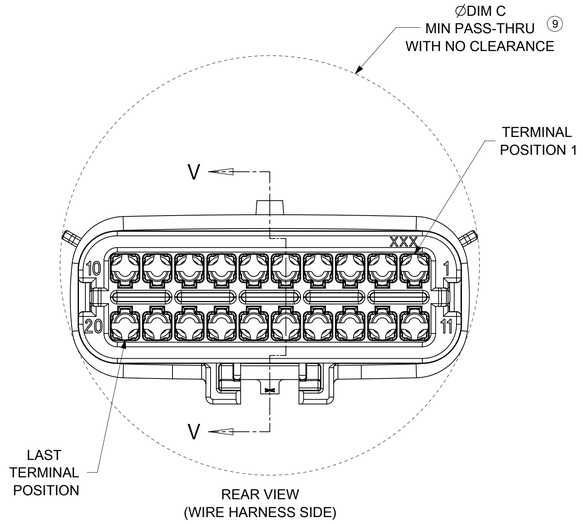

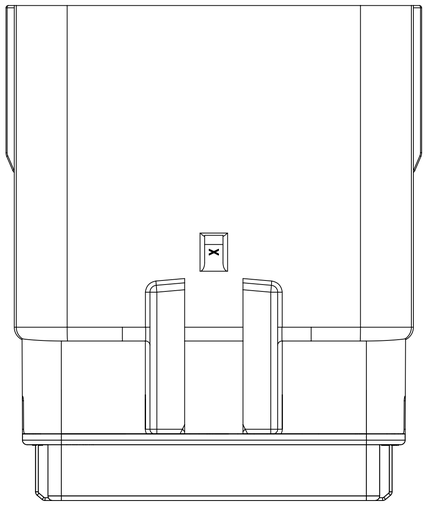

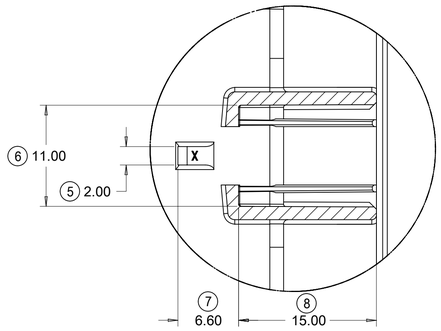

PartialU-U
SCALE 3:1

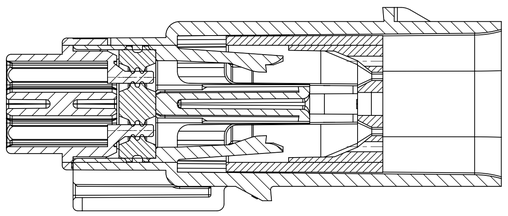

PRIMARY LOCK REINFORCEMENT (PLR) SHOWN
IN PRE-STAGED POSITION

SECTION W-W

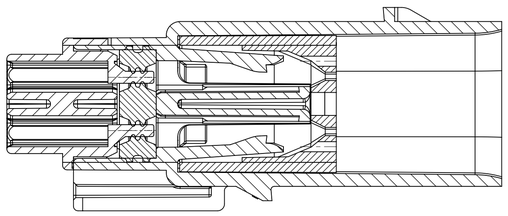

PRIMARY LOCK REINFORCEMENT (PLR) SHOWN
IN FINAL-LOCK POSITION

SECTION V-V

SYMBOLS	
A = 0	
E = 0	
F = 0	
S = 0	
= 0	
C = 0	
= 0	
= 0	
G = 0	

THIS DRAWING CONTAINS INFORMATION THAT IS PROPRIETARY TO MOLEX ELECTRONIC TECHNOLOGIES, LLC AND SHOULD NOT BE USED WITHOUT WRITTEN PERMISSION

DIMENSION UNITS	SCALE
mm	3:1

GENERAL TOLERANCES (UNLESS SPECIFIED)

ANGULAR TOL	±	1.0 °
4 PLACES	±	
3 PLACES	±	
2 PLACES	±	0.1
1 PLACE	±	0.2
0 PLACES	±	

DRAFT WHERE APPLICABLE MUST REMAIN WITHIN DIMENSIONS

CURRENT REV DESC:

EC NO: 171650
DRWN: PMANJUNATHAC 2018/01/03
CHK'D: MVANSLAMBROU 2018/02/16
APPR: MVANSLAMBROU 2018/02/16

INITIAL REVISION:
DRWN: APROFFITT 2014/04/28
APPR: VKOSHY 2014/05/14

molex

MX150 BLADE
DUAL ROW SEALED ASSEMBLY MAT SEAL

PRODUCT CUSTOMER DRAWING

DOCUMENT NUMBER	DOC TYPE	DOC PART	REVISION
SD-33482-0001	PSD	001	E2

THIRD ANGLE PROJECTION	DRAWING	SERIES	MATERIAL NUMBER	CUSTOMER	SHEET NUMBER
	A1-SIZE	33482		GENERAL MARKET	5 OF 11

DOCUMENT STATUS	P1	RELEASE DATE	2018/02/16 22:02:26

PDMWORK Version 19 (prod-47)
Printed on A1 size
Date/Time: 2018/02/16 22:02:26

SHEET DESCRIPTION
SYSTEM PACKAGING

CHARTED DIMENSION				
CKT	BLADE CONFIGURATION	RECEPTACLE CONFIGURATION	DIMENSIONS	
			K	L
2X2	STANDARD	W/O CLIPSLOT	72.78	28.00
		W/ CLIPSLOT	72.78	28.50
		LENGTHENED	77.21	28.00
2X3	STANDARD	W/O CLIPSLOT	72.78	28.00
		W/ CLIPSLOT		30.50
	LENGTHENED	W/O CLIPSLOT	74.79	28.00
		W/ CLIPSLOT		30.50
2X4	STANDARD	W/O CLIPSLOT	72.78	29.50
		W/ CLIPSLOT		31.50
2X6	STANDARD	W/O CLIPSLOT	72.79	35.58
		W/ CLIPSLOT		
2X8	STANDARD	W/O CLIPSLOT	72.67	42.25
		W/ CLIPSLOT		
2X10	STANDARD	STANDARD	72.78	49.05

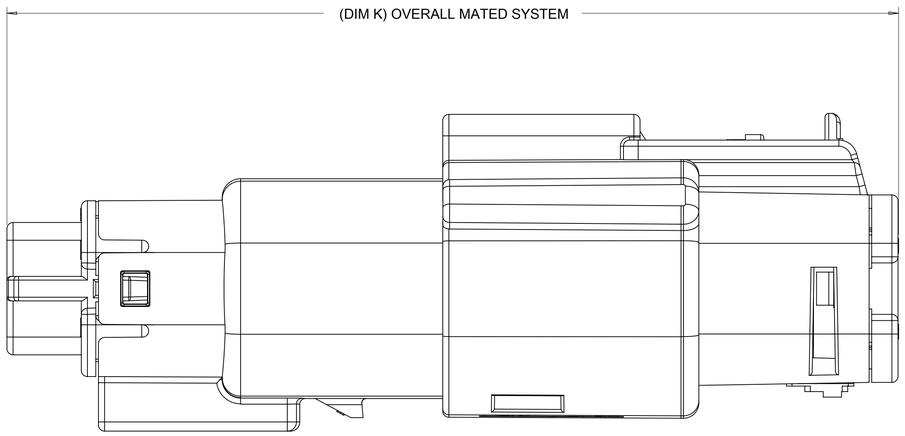

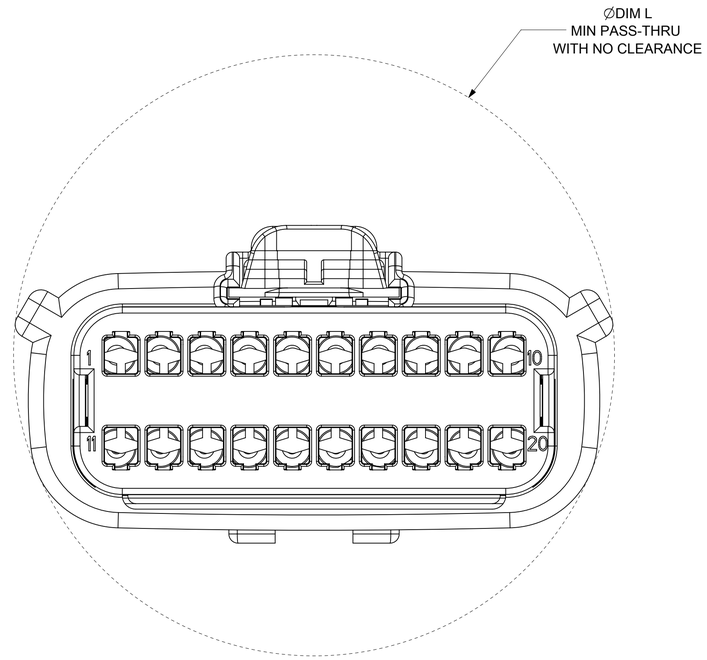

SYMBOLS	
A	= 0
C	= 0
D	= 0
S	= 0
	= 0
C	= 0
	= 0
	= 0
V	= 0

THIS DRAWING CONTAINS INFORMATION THAT IS PROPRIETARY TO MOLEX ELECTRONIC TECHNOLOGIES, LLC AND SHOULD NOT BE USED WITHOUT WRITTEN PERMISSION

DIMENSION UNITS	SCALE
mm	4:1

GENERAL TOLERANCES (UNLESS SPECIFIED)		
ANGULAR TOL	±	1.0 °
4 PLACES	±	
3 PLACES	±	
2 PLACES	±	0.1
1 PLACE	±	0.2
0 PLACES	±	

DRAFT WHERE APPLICABLE MUST REMAIN WITHIN DIMENSIONS

CURRENT REV DESC:

EC NO: 171650
DRWN: PMANJUNATHAC 2018/01/03
CHK'D: MVANSLAMBROU 2018/02/16
APPR: MVANSLAMBROU 2018/02/16

INITIAL REVISION:
DRWN: APROFFITT 2014/04/28
APPR: VKOSHY 2014/05/14

THIRD ANGLE PROJECTION | DRAWING: A1-SIZE | SERIES: 33482

molex

MX150 BLADE
DUAL ROW SEALED ASSEMBLY MAT SEAL

PRODUCT CUSTOMER DRAWING

DOCUMENT NUMBER	DOC TYPE	DOC PART	REVISION
SD-33482-0001	PSD	001	E2

MATERIAL NUMBER	CUSTOMER	SHEET NUMBER
	GENERAL MARKET	6 OF 11

DOCUMENT STATUS	P1	RELEASE DATE	2018/02/16 22:02:26

TEMPLATE FILENAME:
REVISION: H
DATE: 2017/10/06

SHEET DESCRIPTION
BACKSHELL NOTES

BACKSHELL NOTES: VALID UNLESS OTHERWISE SPECIFIED

1. GENERAL:
a. APPLICATION SPECIFICATION SEE: AS-34951-001
- -DESIGNED TO MATE WITH BLADE SEALED ASSEMBLY SPECIFIED IN MOLEX DRAWING SD-33482-0001.
- -SYSTEM TO BE USED WITH WIRE WITHIN DIAMETER RANGE OF 1.2mm TO 2.69mm.
- -COMPONENTS ARE OPTIONAL AND MUST BE PURCHASED SEPERATELY.
- -DESIGN IS OWNED BY SCHLEMMER FOR SCHLEMMER BACKSHELL.
- -DESIGN IS OWNED BY MOLEX FOR MOLEX BACKSHELL.
- -90˝ ADAPTOR DESIGN IS OWNED BY MOLEX.
- -FOR ADDITIONAL INFORMATION SEE THE BACKSHELL COMPONENT DRAWING SD-34950-0001.

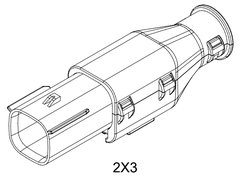

2X3

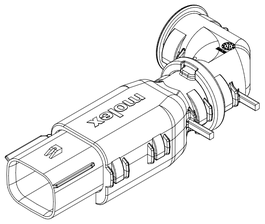

2X4

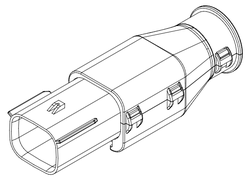

2X4

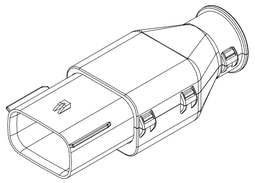

2X6

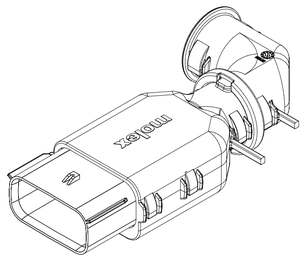

2X8

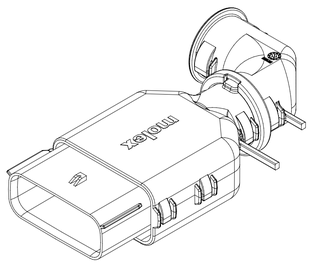

2X10

BACKSHELL CUSTOMER
MODEL NUMBER LEGEND

34950-XXXX

CUSTOMER MODEL COMPONENTS
- 0 - SCHLEMMER BACKSHELL ONLY
- 1 - SCHLEMMER BACKSHELL & MX150 HOUSING KEY A ASSEMBLY
- 2 - SCHLEMMER BACKSHELL & MX150 HOUSING KEY B ASSEMBLY
- 3 - SCHLEMMER BACKSHELL & MX150 HOUSING KEY C ASSEMBLY
- 4 - SCHLEMMER BACKSHELL & MX150 HOUSING KEY D ASSEMBLY
- 5 - MOLEX BACKSHELL ONLY
- 6 - MOLEX BACKSHELL & MX150 HOUSING KEY A ASSEMBLY
- 7 - MOLEX BACKSHELL & MX150 HOUSING KEY B ASSEMBLY
- 8 - MOLEX BACKSHELL & MX150 HOUSING KEY C ASSEMBLY
- 9 - MOLEX BACKSHELL & MX150 HOUSING KEY D ASSEMBLY

BACKSHELL FEATURES
- 1 - WITH RIBS
- 2 - WITHOUT RIBS
- 3 - 90˝ ADAPTOR

MX150 CIRCUIT SIZE 04, 06, 08, 12, 16, 20

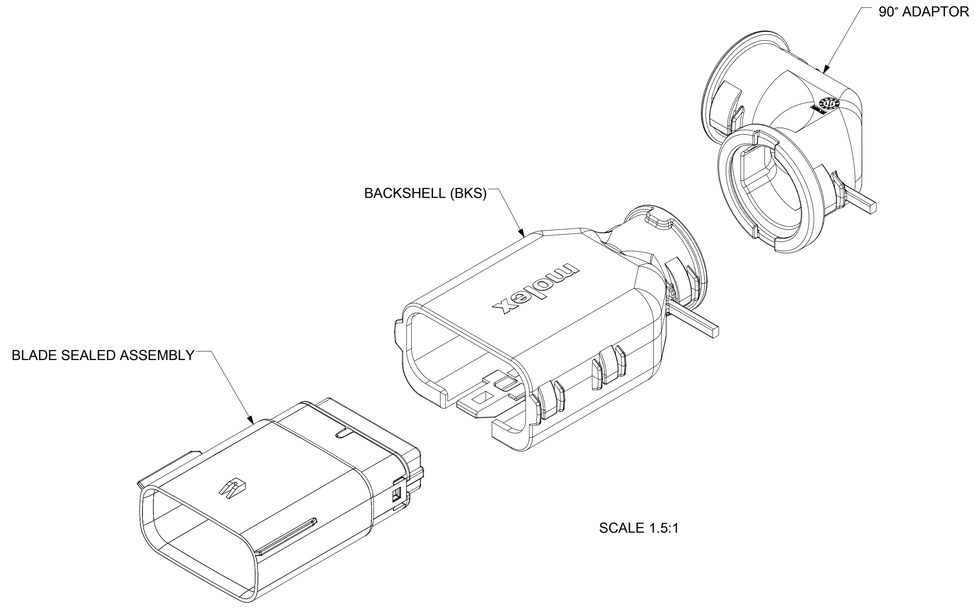

SCALE 1.5:1

DOCUMENT STATUS	P1	RELEASE DATE	2018/02/16 22:02:26

SYMBOLS	DIMENSION UNITS	SCALE	CURRENT REV DESC:	molex
= 0	mm	1.5:1		
= 0	GENERAL TOLERANCES (UNLESS SPECIFIED)			MX150 BLADE DUAL ROW SEALED ASSEMBLY MAT SEAL
= 0	ANGULAR TOL	± 1.0 °	EC NO: 171650	
= 0	4 PLACES	±	DRWN: PMANJUNATHAC 2018/01/03	
= 0	3 PLACES	±	CHK'D: MVANSLAMBROU 2018/02/16	
= 0	2 PLACES	± 0.1	APPR: MVANSLAMBROU 2018/02/16	PRODUCT CUSTOMER DRAWING
= 0	1 PLACE	± 0.2	INITIAL REVISION:	
= 0	0 PLACES	±	DRWN: APROFFITT 2014/04/28	
= 0	DRAFT WHERE APPLICABLE MUST REMAIN WITHIN DIMENSIONS		APPR: VKOSHY 2014/05/14	
= 0	THIRD ANGLE PROJECTION	DRAWING	SERIES	MATERIAL NUMBER
		A1-SIZE	33482	

THIS DRAWING CONTAINS INFORMATION THAT IS PROPRIETARY TO MOLEX ELECTRONIC TECHNOLOGIES, LLC AND SHOULD NOT BE USED WITHOUT WRITTEN PERMISSION

DOCUMENT NUMBER	DOC TYPE	DOC PART	REVISION
SD-33482-0001	PSD	001	E2

CUSTOMER	SHEET NUMBER
GENERAL MARKET	7 OF 11

FORMAT: molex-tb-prod-A1-
DEVIATION: N
DATE: 2017/10/06

SHEET DESCRIPTION
SCHLEMMER BACKSHELL

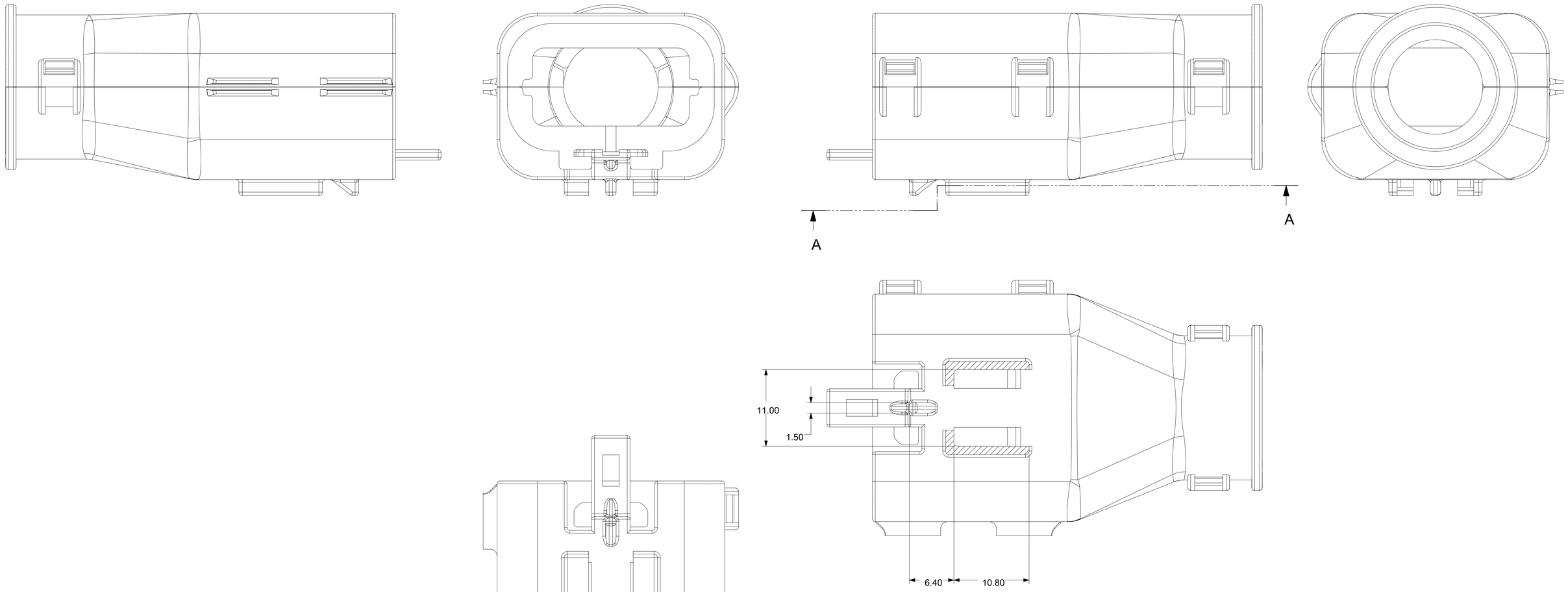

SECTION A-A

THIS DRAWING CONTAINS INFORMATION THAT IS PROPRIETARY TO MOLEX ELECTRONIC TECHNOLOGIES, LLC AND SHOULD NOT BE USED WITHOUT WRITTEN PERMISSION

SYMBOLS	DIMENSION UNITS	SCALE
= 0	mm	3.5:1
= 0	GENERAL TOLERANCES (UNLESS SPECIFIED)	
= 0	ANGULAR TOL ± 1.0 °	
= 0	4 PLACES ±	
= 0	3 PLACES ±	
= 0	2 PLACES ± 0.1	
= 0	1 PLACE ± 0.2	
= 0	0 PLACES ±	
= 0	DRAFT WHERE APPLICABLE MUST REMAIN WITHIN DIMENSIONS	

CURRENT REV DESC:

EC NO: 171650
DRWN: PMANJUNATHAC 2018/01/03
CHK'D: MVANSLAMBROU 2018/02/16
APPR: MVANSLAMBROU 2018/02/16

INITIAL REVISION:
DRWN: APROFFITT 2014/04/28
APPR: VKOSHY 2014/05/14

THIRD ANGLE PROJECTION | DRAWING: A1-SIZE | SERIES: 33482

molex

MX150 BLADE
DUAL ROW SEALED ASSEMBLY MAT SEAL

PRODUCT CUSTOMER DRAWING

DOCUMENT NUMBER	DOC TYPE	DOC PART	REVISION
SD-33482-0001	PSD	001	E2

MATERIAL NUMBER	CUSTOMER	SHEET NUMBER
	GENERAL MARKET	8 OF 11

DOCUMENT STATUS	P1	RELEASE DATE	2018/02/16 22:02:26

SHEET DESCRIPTION
MOLEX BACKSHELL

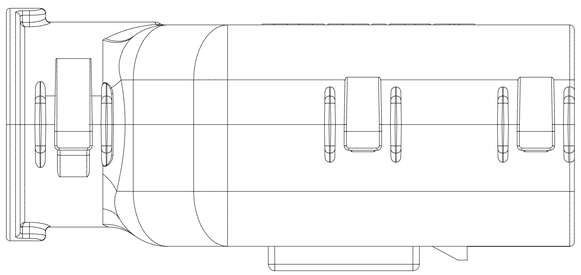

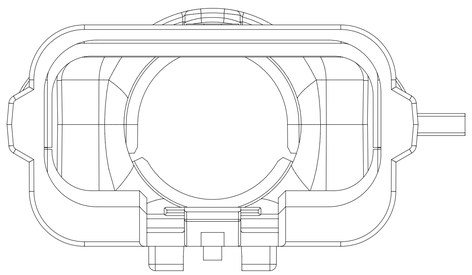

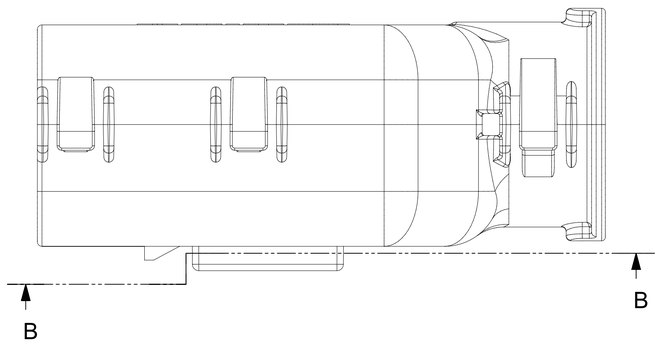

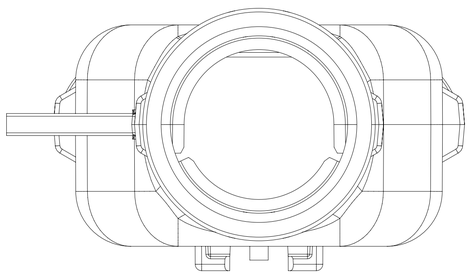

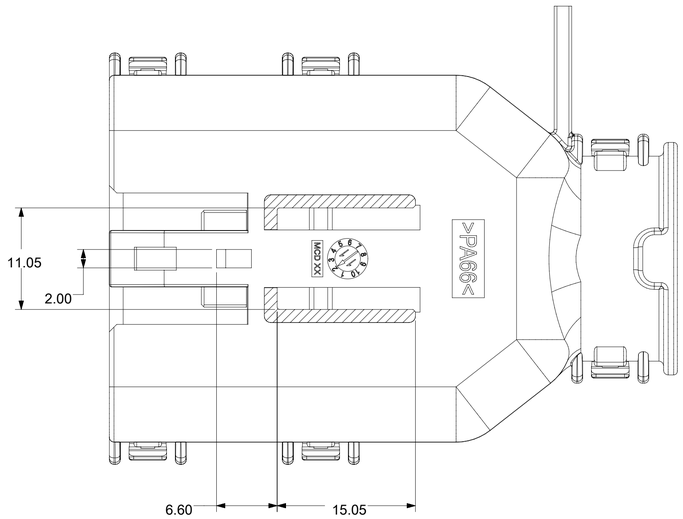

SECTION B-B

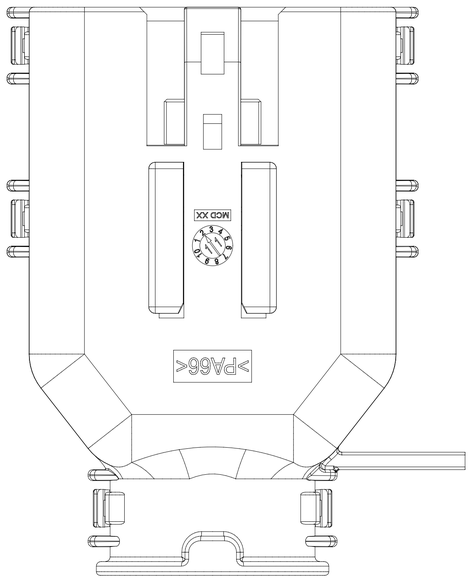

SYMBOLS	
A = 0	
C = 0	
F = 0	
S = 0	
= 0	
C = 0	
= 0	
= 0	
= 0	

THIS DRAWING CONTAINS INFORMATION THAT IS PROPRIETARY TO MOLEX ELECTRONIC TECHNOLOGIES, LLC AND SHOULD NOT BE USED WITHOUT WRITTEN PERMISSION

DIMENSION UNITS	SCALE
mm	3:1

GENERAL TOLERANCES (UNLESS SPECIFIED)		
ANGULAR TOL	±	1.0 °
4 PLACES	±	
3 PLACES	±	
2 PLACES	±	0.1
1 PLACE	±	0.2
0 PLACES	±	

DRAFT WHERE APPLICABLE MUST REMAIN WITHIN DIMENSIONS

CURRENT REV DESC:

EC NO: 171650
DRWN: PMANJUNATHAC 2018/01/03
CHK'D: MVANSLAMBROU 2018/02/16
APPR: MVANSLAMBROU 2018/02/16

INITIAL REVISION:
DRWN: APROFFITT 2014/04/28
APPR: VKOSHY 2014/05/14

THIRD ANGLE PROJECTION | DRAWING: A1-SIZE | SERIES: 33482

molex

MX150 BLADE
DUAL ROW SEALED ASSEMBLY MAT SEAL

PRODUCT CUSTOMER DRAWING

DOCUMENT NUMBER	DOC TYPE	DOC PART	REVISION
SD-33482-0001	PSD	001	E2

MATERIAL NUMBER	CUSTOMER	SHEET NUMBER
	GENERAL MARKET	9 OF 11

DOCUMENT STATUS	P1	RELEASE DATE	2018/02/16 22:02:26

TEMPLATE: master-landscape
REVISION: H
DATE: 2017/10/05

SHEET DESCRIPTION
SCHLEMMER BACKSHELL CONFIGURATIONS

CHARTED DIMENSIONS

CKT	BLADE CONFIGURATION	RECEPTACLE CONFIGURATION	DIMENSIONS				
			M	N	P	R	T
2X3	STANDARD	STANDARD	106.83	32.75	31.75	29.00	29.50
	LENGTHENED		108.71				
2X4	STANDARD	STANDARD	106.83	33.50	31.90	30.70	30.70
2X6	STANDARD	STANDARD	106.83	37.84	37.27	35.83	36.83

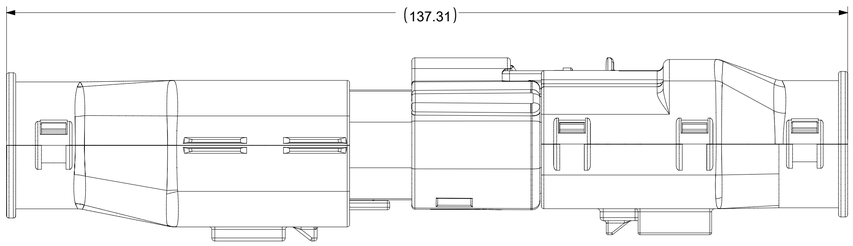

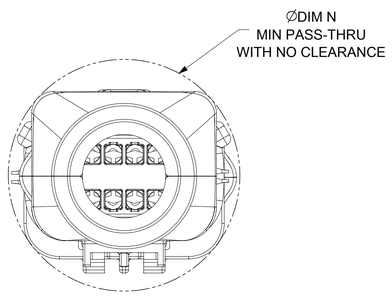

OVERALL MATED SYSTEM WITH BLADE AND RECEPTACLE BACKSHELL

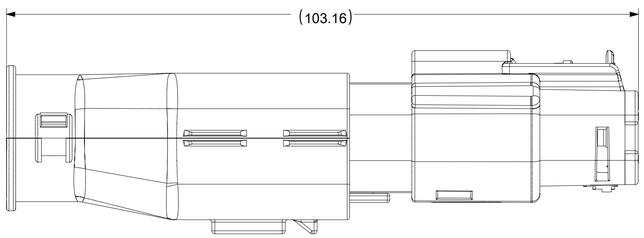

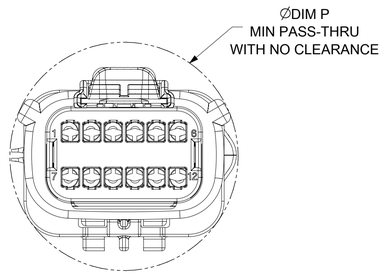

OVERALL MATED SYSTEM WITH BLADE BACKSHELL

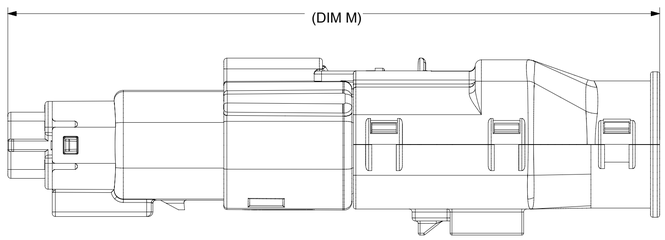

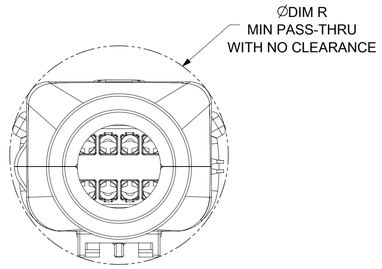

OVERALL MATED SYSTEM WITH RECEPTACLE BACKSHELL

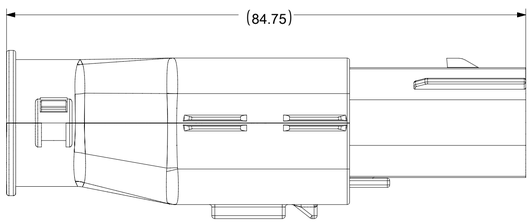

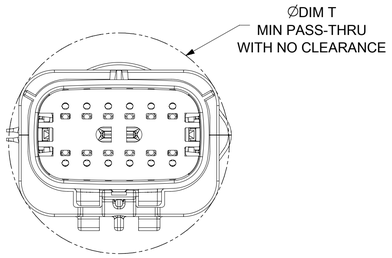

BLADE SEALED ASSEMBLY WITH BLADE BACKSHELL

SYMBOLS	DIMENSION UNITS	SCALE
F A = 0	mm	2:1
F C = 0	GENERAL TOLERANCES (UNLESS SPECIFIED)	
F B = 0	ANGULAR TOL ± 1.0 °	
S = 0	4 PLACES ±	
▼ = 0	3 PLACES ±	
C = 0	2 PLACES ± 0.1	
☒ = 0	1 PLACE ± 0.2	
■ = 0	0 PLACES ±	
= 0	DRAFT WHERE APPLICABLE MUST REMAIN WITHIN DIMENSIONS	

THIS DRAWING CONTAINS INFORMATION THAT IS PROPRIETARY TO MOLEX ELECTRONIC TECHNOLOGIES, LLC AND SHOULD NOT BE USED WITHOUT WRITTEN PERMISSION

CURRENT REV DESC:

EC NO: 171650
DRWN: PMANJUNATHAC 2018/01/03
CHK'D: MVANSLAMBROU 2018/02/16
APPR: MVANSLAMBROU 2018/02/16

INITIAL REVISION:
DRWN: APROFFITT 2014/04/28
APPR: VKOSHY 2014/05/14

THIRD ANGLE PROJECTION | DRAWING: A1-SIZE | SERIES: 33482

molex

MX150 BLADE
DUAL ROW SEALED ASSEMBLY MAT SEAL

PRODUCT CUSTOMER DRAWING

DOCUMENT NUMBER	DOC TYPE	DOC PART	REVISION
SD-33482-0001	PSD	001	E2

MATERIAL NUMBER	CUSTOMER	SHEET NUMBER
	GENERAL MARKET	10 OF 11

DOCUMENT STATUS	P1	RELEASE DATE	2018/02/16 22:02:26

FORMAT: master-tb-prod-A1
DATE: 2018/02/16
DATE: 2017/10/06

SHEET DESCRIPTION
MOLEX BACKSHELL CONFIGURATIONS

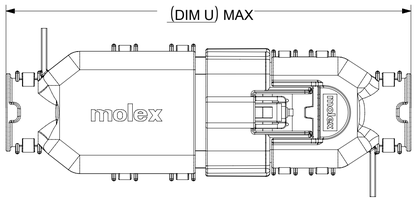

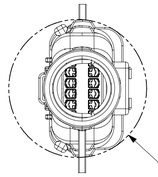

MIN PASS-THRU
WITH NO CLEARANCE

OVERALL MATED SYSTEM WITH BLADE AND RECEPTACLE BACKSHELL

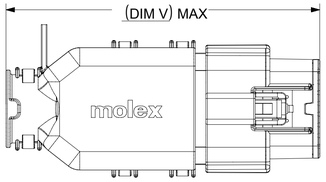

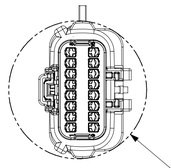

MIN PASS-THRU
WITH NO CLEARANCE

OVERALL MATED SYSTEM WITH BLADE BACKSHELL

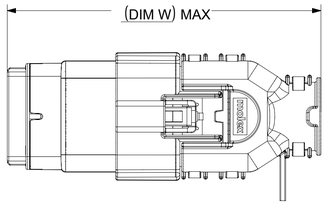

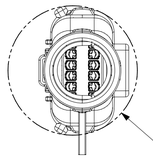

MIN PASS-THRU
WITH NO CLEARANCE

OVERALL MATED SYSTEM WITH RECEPTACLE BACKSHELL

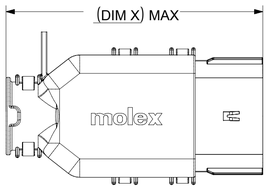

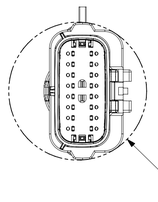

MIN PASS-THRU
WITH NO CLEARANCE

BLADE SEALED ASSEMBLY WITH BLADE BACKSHELL

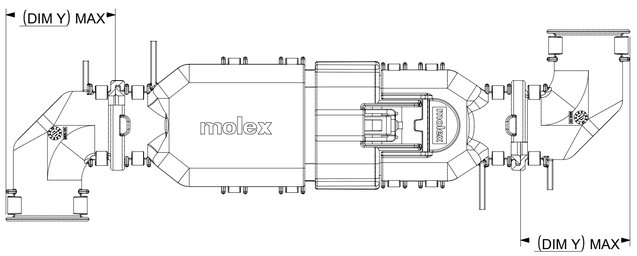

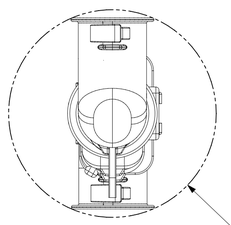

MIN PASS-THRU
WITH NO CLEARANCE

ADD THE VALUE OF 'Y' TO THE TOTAL DIMENSION
WHENEVER ADAPTOR IS USED

CHARTED DIMENSIONS

CKT	BLADE CONFIGURATION	RECEPTACLE CONFIGURATION	DIMENSIONS									
			U	V	W	X	Y	AA	AB	AC	AD	AE
2X4	STANDARD	STANDARD	115.24	94.36	93.93	75.62	32.10	32.93	32.54	32.85	31.76	56.81
2X8	STANDARD	STANDARD	132.49	102.81	102.73	84.07	36.10	45.44	45.44	42.65	45.44	68.18
2X10	STANDARD	STANDARD	132.49	102.81	102.73	84.07	36.10	45.44	45.44	42.65	45.44	68.18

DOCUMENT STATUS	P1	RELEASE DATE	2018/02/16 22:02:26

SYMBOLS
= 0
= 0
= 0
= 0
= 0
= 0
= 0
= 0
= 0

THIS DRAWING CONTAINS INFORMATION THAT IS PROPRIETARY TO MOLEX ELECTRONIC TECHNOLOGIES, LLC AND SHOULD NOT BE USED WITHOUT WRITTEN PERMISSION

DIMENSION UNITS	SCALE
mm	1:1

GENERAL TOLERANCES (UNLESS SPECIFIED)

ANGULAR TOL	±	1.0 °
4 PLACES	±	
3 PLACES	±	
2 PLACES	±	0.1
1 PLACE	±	0.2
0 PLACES	±	

DRAFT WHERE APPLICABLE MUST REMAIN WITHIN DIMENSIONS

CURRENT REV DESC:

EC NO: 171650
DRWN: PMANJUNATHAC 2018/01/03
CHK'D: MVANSLAMBROU 2018/02/16
APPR: MVANSLAMBROU 2018/02/16

INITIAL REVISION:
DRWN: APROFFITT 2014/04/28
APPR: VKOSHY 2014/05/14

THIRD ANGLE PROJECTION | DRAWING: A1-SIZE | SERIES: 33482

molex

MX150 BLADE
DUAL ROW SEALED ASSEMBLY MAT SEAL

PRODUCT CUSTOMER DRAWING

DOCUMENT NUMBER	DOC TYPE	DOC PART	REVISION
SD-33482-0001	PSD	001	E2

MATERIAL NUMBER	CUSTOMER	SHEET NUMBER
	GENERAL MARKET	11 OF 11

TABLE OF CONTENTS	
SHEET NO.	SHEET DESCRIPTION
1	NOTES AND BOM
2	CONFIGURATIONS
3	SCHLEMMER BACKSHELL DETAIL
4	MOLEX BACKSHELL DETAIL

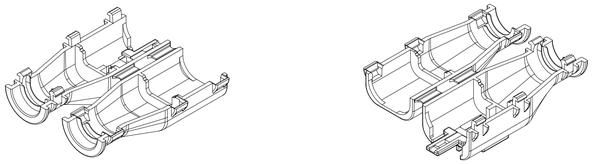

2X3 BLADE

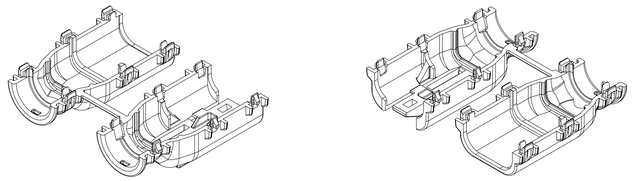

2X4 BLADE

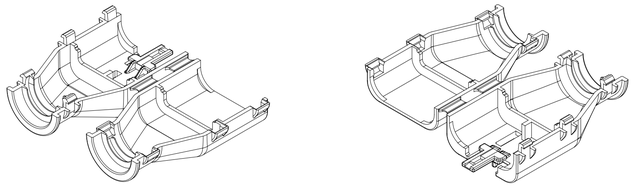

2X6 BLADE

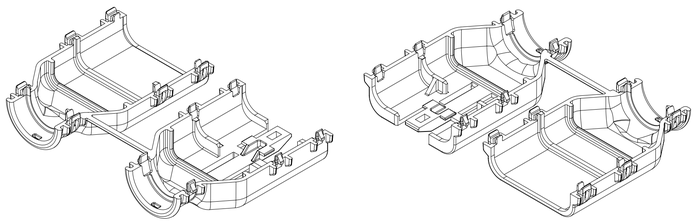

2X8 BLADE

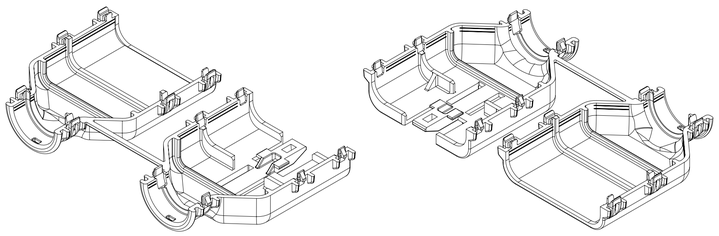

2X10 BLADE

BACKSHELL NOTES: VALID UNLESS OTHERWISE SPECIFIED

1. GENERAL:
a. APPLICATION SPECIFICATION SEE: AS-34951-001
-DESIGNED TO MATE WITH BLADE SEALED ASSEMBLY AS SPECIFIED IN SD-33482-0001.
-COMPONENTS ARE OPTIONAL AND MUST BE PURCHASED SEPERATELY
b. MOLEX PRODUCT SPECIFICATION SEE: TBD
-BACKSHELL DESIGN IS OWNED BY MOLEX.
c. OUTSOURCED MFG PRODUCT SPECIFICATION
-BACKSHELL DESIGN IS OWNED BY SCHLEMMER.
-THESE PRODUCTS ARE ONE TIME USE ONLY.
-REMOVAL FORCE OF THE BACKSHELL FROM THE MOLEX CONNECTOR TO BE 100N MIN.
-REMOVAL FORCE OF SLIT CONVOLUTE FROM THE WITH RIB OPTION BACKSHELLS TO BE 100N MIN.
-REMOVAL FORCE OF UNSLIT CONVOLUTE FROM THE WITH RIB OPTION BACKSHELLS TO BE 100N MIN.
d. PACKAGING SPECIFICATION: SEE BOM
e. PARTS MUST BE IN COMPLIANCE TO MOLEX CHEMICAL SUBSTANCES FOR PRODUCTS AND PACKAGING SPECIFICATION: QEHS-699000-300
f. DATA MUST BE SUBMITTED UNDER THE MOLEX PART NUMBER TO IMDS (COMPANY ID#13255)
g. FOLLOWING PRODUCTION CODES TO BE PRESENT
-DATE CODE
-MOLD CAVITY CODE
-MOLEX LOGO
-RECYCLE CODE
-SUPPLIER PART NUMBER - SCHLEMMER PARTS ONLY

2. DESIGN - MATERIALS:
a. PA66 0% GLASS FILLED
b. BLACK

3. DESIGN GEOMETRY:
a. THIS IS A 100% CAD GENERATED PART. THE CAD MATHEMATICAL DATA IS THE MASTER FOR THIS PART. FOR DIMENSIONAL OR ANY INFORMATION NOT SHOWN ON THIS DRAWING, ANALYZE THE CAD MODEL.
b. GEOMETRIC DIMENSIONS AND TOLERANCES PER ASME Y14.5M - 2009.
c. CORNERS SHOWN AS SHARP TO BE R 0.1.
d. VISUAL DEFECTS SHALL MEET COSMETEIC STANDARD PS-45499-002 (CLASS C).
e. ALLOWABLE FLASH, PARTING LINES MISMATCH, EJECTOR PINS MARK, AND GATE VESTIGE TO BE +0.30 MAX PROTUSION.

BILL OF MATERIALS (BOM)

DESCRIPTION	PART NUMBER	CIRCUIT SIZE	COLOR	RIBS	CONVOLUTE SIZE	PACKAGING DRAWING NUMBER	STATUS	MANUFACTURER
2X3, WITH RIB	34950-0610	2X3	BLACK	YES	9 mm DELPHI	PK-31302-118	SALEABLE	OUTSOURCED MFG
2X3, WITHOUT RIB	34950-0620	2X3	BLACK	NO	9 mm DELPHI	PK-31302-118	SALEABLE	OUTSOURCED MFG
2X4, WITH RIB	34950-0811	2X4	BLACK	YES	NW 12 SCHLEMMER	349509000 PDD	SALEABLE	MOLEX
2X4, WITHOUT RIB	34950-0821	2X4	BLACK	NO	NW 12 SCHLEMMER	349509000 PDD	SALEABLE	MOLEX
2X6, WITH RIB	34950-1210	2X6	BLACK	YES	13 mm DELPHI	PK-31302-118	SALEABLE	OUTSOURCED MFG
2X6, WITHOUT RIB	34950-1220	2X6	BLACK	NO	13 mm DELPHI	PK-31302-118	SALEABLE	OUTSOURCED MFG
2X8, WITH RIB	34950-1611	2X8	BLACK	YES	NW 16 SCHLEMMER	349509000 PDD	SALEABLE	MOLEX
2X8, WITHOUT RIB	34950-1621	2X8	BLACK	NO	NW 16 SCHLEMMER	349509000 PDD	SALEABLE	MOLEX
2X10, WITH RIB	34950-2011	2X10	BLACK	YES	NW 16 SCHLEMMER	349509000 PDD	SALEABLE	MOLEX
2X10, WITHOUT RIB	34950-2021	2X10	BLACK	NO	NW 16 SCHLEMMER	349509000 PDD	SALEABLE	MOLEX

REV	DESCRIPTION
B11	CHANGED DIMS ON SHEET 3 TO MATCH E DWG
B10	UPDATED BACKSHELL MANUFACTURER
B9	CHANGED PARTS STATUS TO SALEABLE
B8	ADDED BALLOON NO. 99
B7	UPDATED BALLOON NUMBERS
B6	UPDATED RIB AND WEDGE FEATURES
B4	UPDATED DIM 26 28 30 32
B3	UPDATED TOLERANCES
B2	ADDED BALLOONS & UPDATED BOM
B1	UPDATED NOTES
B	MIGRATION & ADDED MOLEX PART NUMBERS
A6	UPDATED BILL OF MATERIALS
A5	UPDATED STATUS COLUMN
A4	MINOR NOMENCLATURE CLEAN UP
A3	UPDATED VIEWSET & NOTES
A2	UPDATED REFERENCE DRAWINGS
A1	UPDATED NOTES
A	INITIAL RELEASE

INSPECTION NUMBER LOG
LAST NUMBER: 1 - 5
ADDED: 26 28 30 32 34 35 36 48 98 99
REMOVED: 26 30

QUALITY SYMBOLS
= 0
= 0
= 0
= 0
= 0
= 0
= 0
= 0

EC NO: 638031 2020/05/20
DRWN: PPALLAN 2020/05/22
CHK'D: MVANSLAMBROU 2020/05/22
APPR: MVANSLAMBROU

REV B11

THIS DRAWING CONTAINS INFORMATION THAT IS PROPRIETARY TO MOLEX ELECTRONIC TECHNOLOGIES, LLC AND SHOULD NOT BE USED WITHOUT WRITTEN PERMISSION

GENERAL TOLERANCES (UNLESS SPECIFIED)
ANGULAR TOL ± 3.0 °
4 PLACES ±
3 PLACES ±
2 PLACES ± 0.1
1 PLACE ± 0.2
0 PLACES ±
DRAFT WHERE APPLICABLE MUST REMAIN WITHIN DIMENSIONS

DIMENSION UNITS: mm
SCALE: 1:1
DRWN BY: DAHALL DATE: 2013/03/19
CHK'D BY DATE
APPR BY: VKOSHY DATE: 2013/04/08
DRAWING SIZE: A1
THIRD ANGLE PROJECTION

molex®

MX150 DUAL ROW BLADE BACKSHELLS

PRODUCT CUSTOMER DRAWING

SERIES: 34950
MATERIAL NUMBER
CUSTOMER: GENERAL MARKET
DOCUMENT NUMBER: SD-34950-0001
DOC TYPE: PSD
DOC PART: 001
SHEET NUMBER: 1 OF 4

RELEASE STATUS: P1 | RELEASE DATE: 2020/05/22 12:34:45

SHEET DESCRIPTION
CONFIGURATIONS

WITH RIB

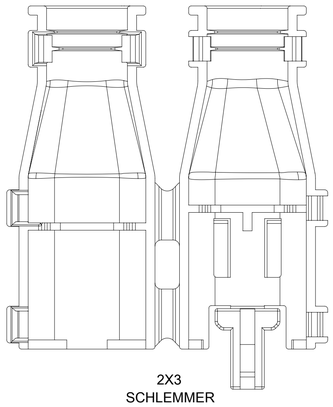

2X3
SCHLEMMER

WITHOUT RIB

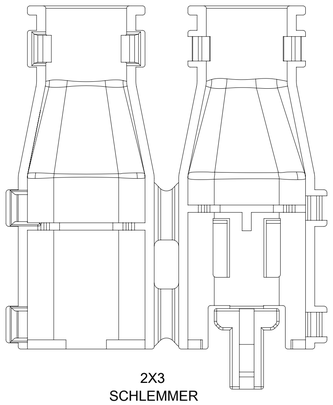

2X3
SCHLEMMER

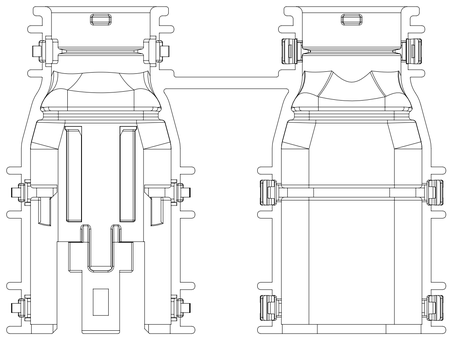

2X4
MOLEX

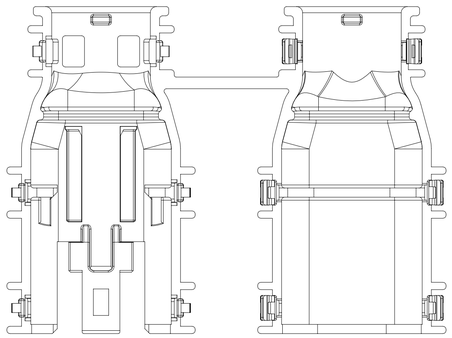

2X4
MOLEX

WITH RIB

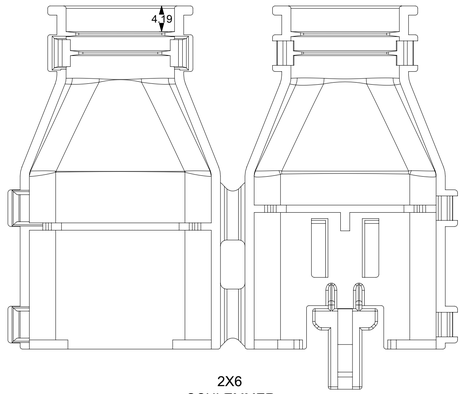

2X6
SCHLEMMER

WITHOUT RIB

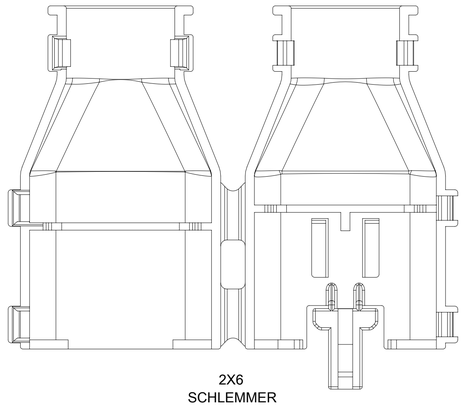

2X6
SCHLEMMER

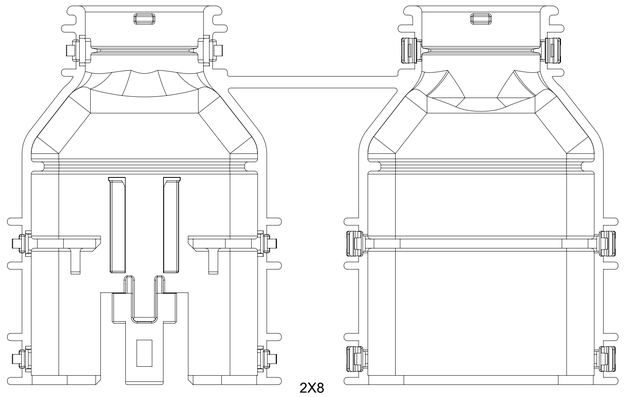

2X8
MOLEX

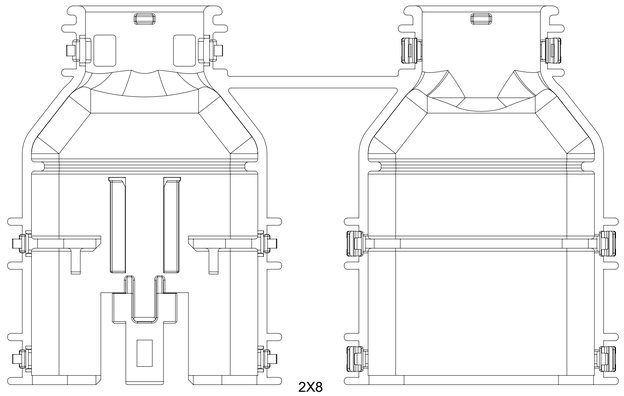

2X8
MOLEX

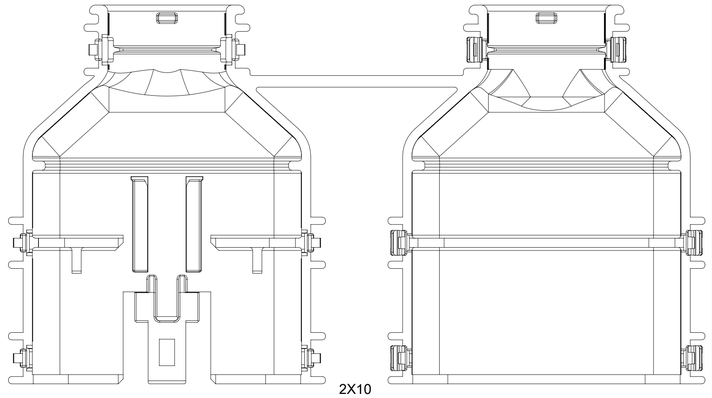

2X10
MOLEX

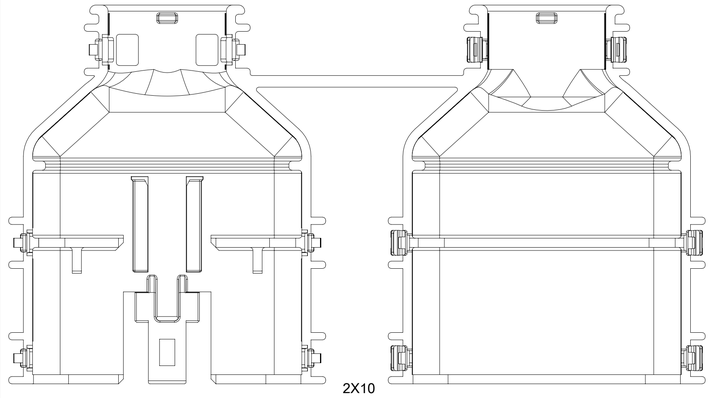

2X10
MOLEX

QUALITY SYMBOLS	
EA	= 0
EC	= 0
EP	= 0
▼	= 0
C	= 0
☒	= 0
■	= 0
V	= 0

THIS DRAWING CONTAINS INFORMATION THAT IS PROPRIETARY TO MOLEX ELECTRONIC TECHNOLOGIES, LLC AND SHOULD NOT BE USED WITHOUT WRITTEN PERMISSION

EC NO: 638031	DRWN: PPALLAN	2020/05/20
CHK'D: MVANSLAMBROU		2020/05/22
APPR: MVANSLAMBROU		2020/05/22

GENERAL TOLERANCES (UNLESS SPECIFIED)		
ANGULAR TOL	± 3.0	°
4 PLACES	±	
3 PLACES	±	
2 PLACES	± 0.1	
1 PLACE	± 0.2	
0 PLACES	±	

DRAFT WHERE APPLICABLE MUST REMAIN WITHIN DIMENSIONS

REV
B11

DIMENSION UNITS	SCALE
mm	2:1
DRWN BY	DATE
DAHALL	2013/03/19
CHK'D BY	DATE
APPR BY	DATE
VKOSHY	2013/04/08
DRAWING SIZE	THIRD ANGLE PROJECTION
A1	

molex®

MX150 DUAL ROW BLADE BACKSHELLS

PRODUCT CUSTOMER DRAWING

SERIES	MATERIAL NUMBER	CUSTOMER
34950		GENERAL MARKET

DOCUMENT NUMBER	DOC TYPE	DOC PART	SHEET NUMBER
SD-34950-0001	PSD	001	2 OF 4

RELEASE STATUS	P1	RELEASE DATE	2020/05/22 12:34:45

PRODUCT: model-fb-pnd-A1-
DRAWING: S
DATE: 2015/06/08

SHEET DESCRIPTION
SCHLEMMER BACKSHELL DETAIL

CHARTED DIMENSION						
PART NUMBER	DIMENSIONS					
	A	B	C	D	E	F
2X3, WITH RIB	56.00	13.20	9.80	3.90	0.65	2.70
2X3, WITHOUT RIB	56.00	13.20	N/A	N/A	N/A	N/A
2X4, WITH RIB	TBD	TBD	TBD	TBD	TBD	TBD
2X4, WITHOUT RIB	TBD	TBD	TBD	TBD	TBD	TBD
2X6, WITH RIB	56.00	17.70	13.6	4.2	0.83	3.10
2X6, WITHOUT RIB	56.00	17.70	N/A	N/A	N/A	N/A

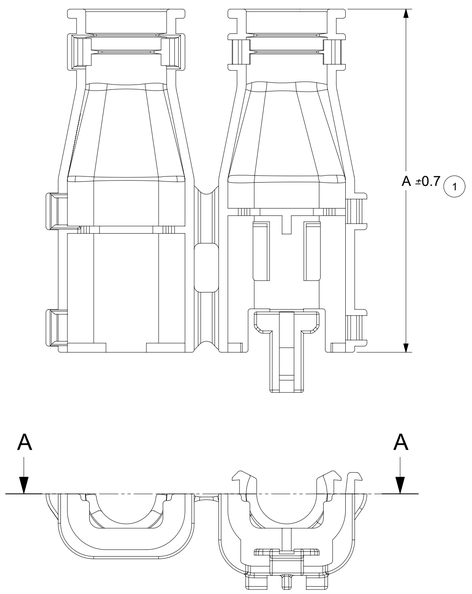

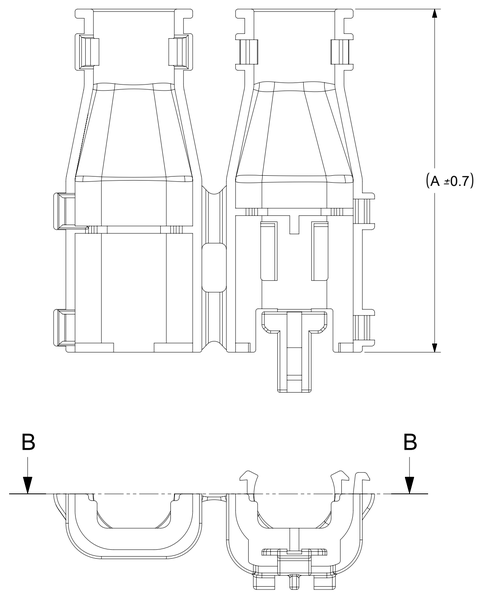

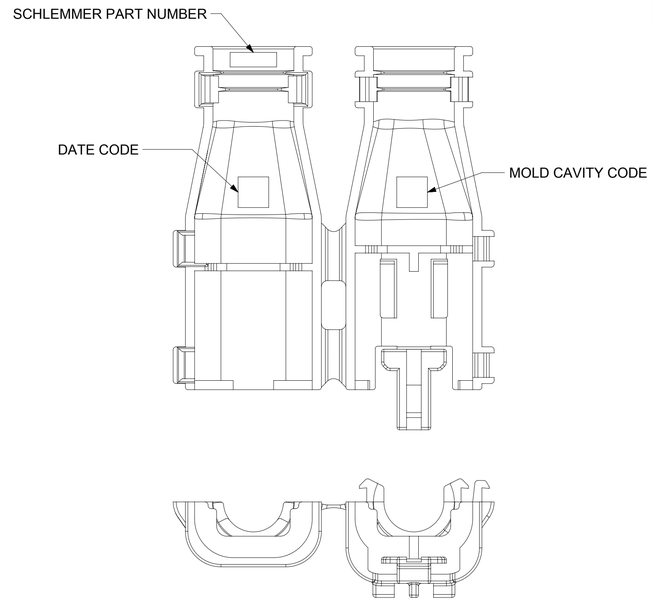

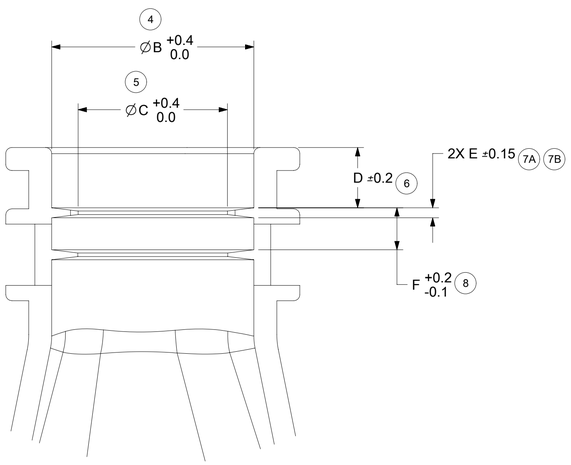

PARTIAL SECTION A-A
SCALE 5:1
WITH RIBS

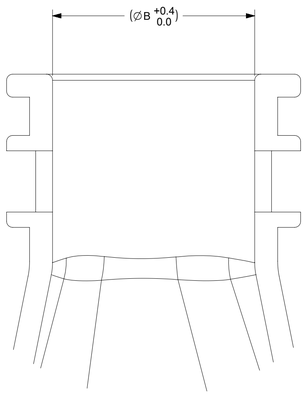

PARTIAL SECTION B-B
SCALE 5:1
WITHOUT RIBS

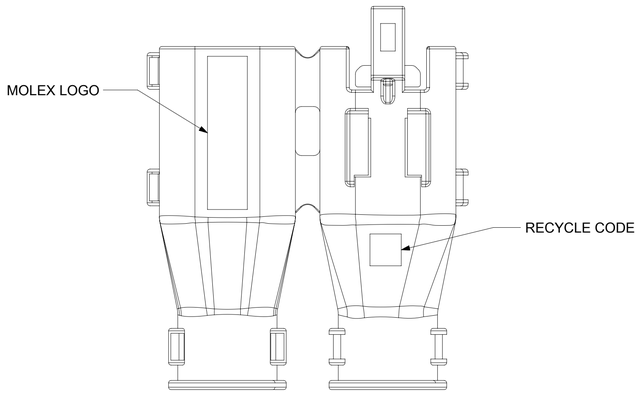

QUALITY SYMBOLS	
(E/A)	= 0
(E/C)	= 0
(E/P)	= 0
▼	= 0
(C)	= 0
☒	= 0
■	= 0
(C)	= 0

THIS DRAWING CONTAINS INFORMATION THAT IS PROPRIETARY TO MOLEX ELECTRONIC TECHNOLOGIES, LLC AND SHOULD NOT BE USED WITHOUT WRITTEN PERMISSION

EC NO: 638031 — 2020/05/20
DRWN: PPALLAN — 2020/05/22
CHK'D: MVANSLAMBROU — 2020/05/22
APPR: MVANSLAMBROU

GENERAL TOLERANCES (UNLESS SPECIFIED)		
ANGULAR TOL	± 3.0	°
4 PLACES	±	
3 PLACES	±	
2 PLACES	± 0.1	
1 PLACE	± 0.2	
0 PLACES	±	

DRAFT WHERE APPLICABLE MUST REMAIN WITHIN DIMENSIONS

REV: B11

DIMENSION UNITS: mm
SCALE: 2:1
DRWN BY: DAHALL — DATE: 2013/03/19
CHK'D BY — DATE
APPR BY: VKOSHY — DATE: 2013/04/08
DRAWING SIZE: A1
THIRD ANGLE PROJECTION

molex®

MX150 DUAL ROW BLADE BACKSHELLS

PRODUCT CUSTOMER DRAWING

SERIES	MATERIAL NUMBER	CUSTOMER
34950		GENERAL MARKET

DOCUMENT NUMBER	DOC TYPE	DOC PART	SHEET NUMBER
SD-34950-0001	PSD	001	3 OF 4

RELEASE STATUS	P1	RELEASE DATE	2020/05/22 12:34:45

COPYRIGHT 2020 MOLEX
REVISION: G
DATE: 2017/02/06

SHEET DESCRIPTION
MOLEX BACKSHELL DETAIL

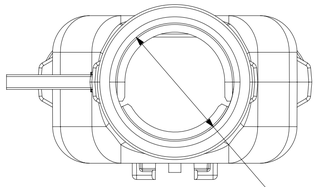

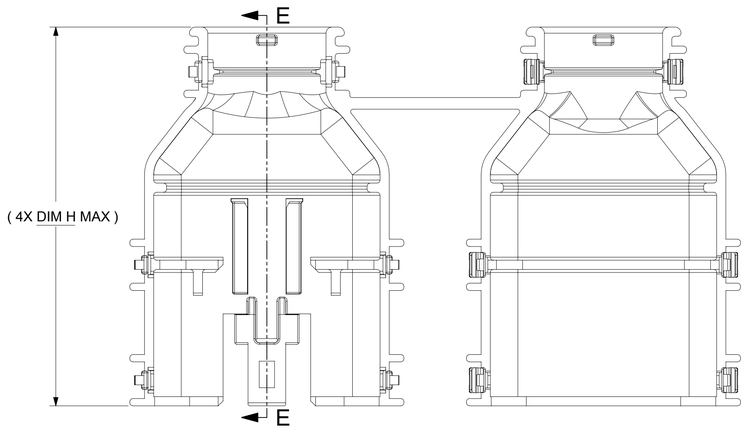

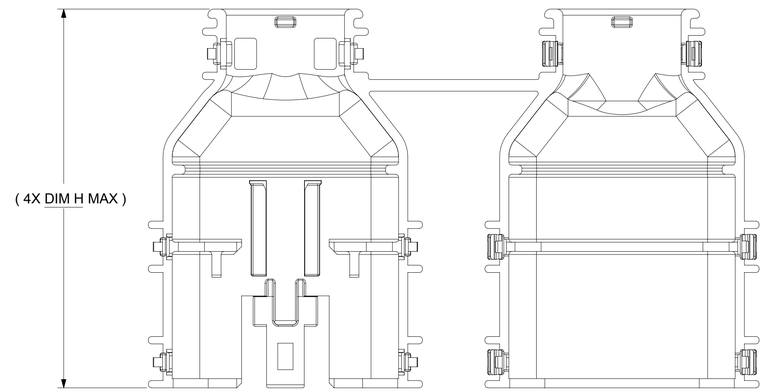

98 99
DIM. R ≥0.15
ALL AROUND

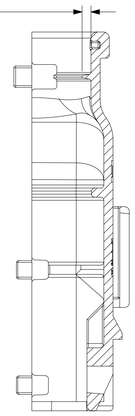

SECTION E-E

CHARTED DIMENSION							
DESCRIPTION	H	J	K	L	M	S	R
2X4, WITH RIB	53.56	16.10	0.80	N/A	N/A	16.10	**1.35**
2X4, WITHOUT RIB	53.56	16.10	N/A	3.60	5.10	16.10	**N/A**
2X8, WITH RIB	62.01	19.30	0.80	N/A	N/A	19.30	**1.45**
2X8, WITHOUT RIB	62.01	19.30	N/A	3.60	5.10	19.30	**N/A**
2X10, WITH RIB	62.01	19.30	0.80	N/A	N/A	19.30	**1.45**
2X10, WITHOUT RIB	62.01	19.30	N/A	3.60	5.10	19.30	**N/A**

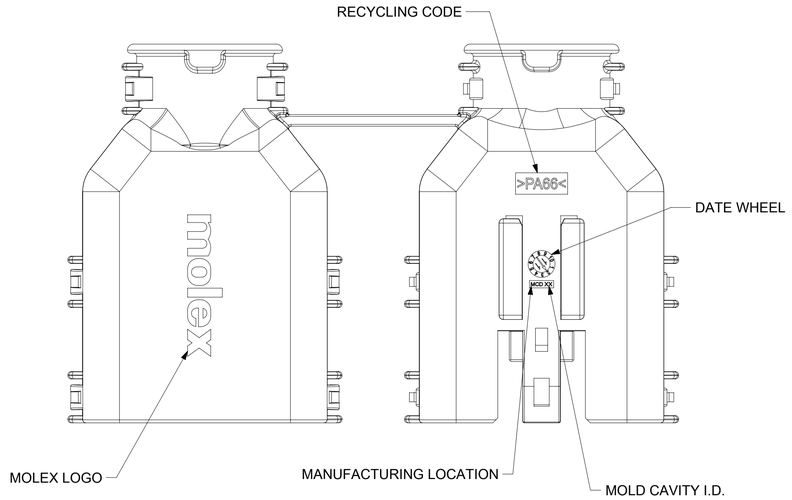

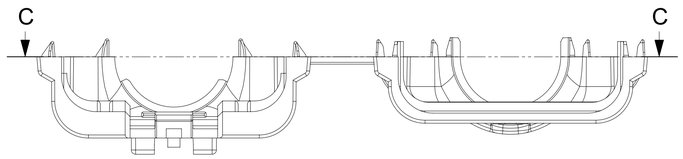

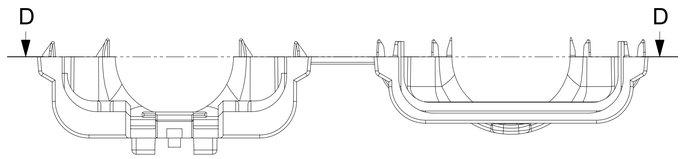

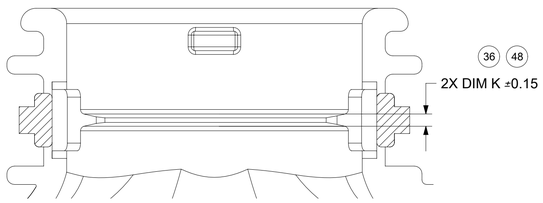

PARTIAL SECTION C-C
SCALE 5:1
WITH RIBS

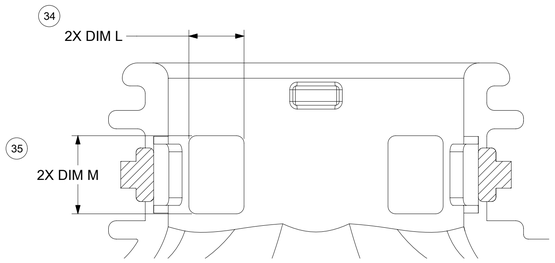

PARTIAL SECTION D-D
SCALE 5:1
WITHOUT RIBS

QUALITY SYMBOLS	
FA	= 0
FE	= 0
FP	= 0
▼	= 0
C	= 0
☒	= 0
■	= 0
G	= 0

THIS DRAWING CONTAINS INFORMATION THAT IS PROPRIETARY TO MOLEX ELECTRONIC TECHNOLOGIES, LLC AND SHOULD NOT BE USED WITHOUT WRITTEN PERMISSION

EC NO: 638031	2020/05/20	
DRWN: PPALLAN	2020/05/22	
CHK'D: MVANSLAMBROU	2020/05/22	
APPR: MVANSLAMBROU	2020/05/22	
REV: B11		

GENERAL TOLERANCES (UNLESS SPECIFIED)

ANGULAR TOL ±	3.0	°
4 PLACES	±	
3 PLACES	±	
2 PLACES	±	0.1
1 PLACE	±	0.2
0 PLACES	±	

DRAFT WHERE APPLICABLE MUST REMAIN WITHIN DIMENSIONS

DIMENSION UNITS	mm
SCALE	2:1
DRWN BY	DAHALL
DATE	2013/03/19
CHK'D BY	
DATE	
APPR BY	VKOSHY
DATE	2013/04/08
DRAWING SIZE	A1
THIRD ANGLE PROJECTION	

molex®

MX150 DUAL ROW BLADE BACKSHELLS

PRODUCT CUSTOMER DRAWING

SERIES	MATERIAL NUMBER	CUSTOMER
34950		GENERAL MARKET

DOCUMENT NUMBER	DOC TYPE	DOC PART	SHEET NUMBER
SD-34950-0001	PSD	001	4 OF 4

RELEASE STATUS	P1	RELEASE DATE	2020/05/22 12:34:45

CONTENT: creator-file-prod-rv
ID: 1010001_rev
DATE: 2017/02/08

TABLE OF CONTENTS	
SHEET NO.	SHEET DESCRIPTION
1	NOTES AND BOM
2	CONFIGURATIONS
3	SCHLEMMER BACKSHELL DETAIL
4	MOLEX BACKSHELL DETAIL

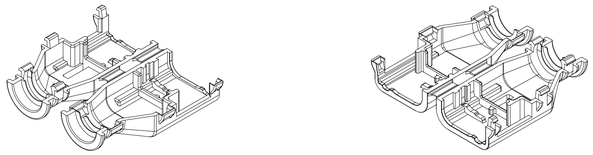

2X3 RECEPTACLE

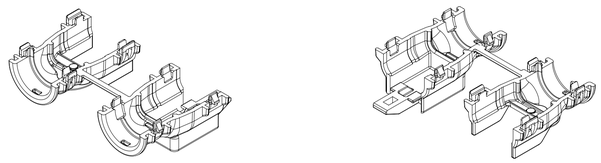

2X4 RECEPTACLE

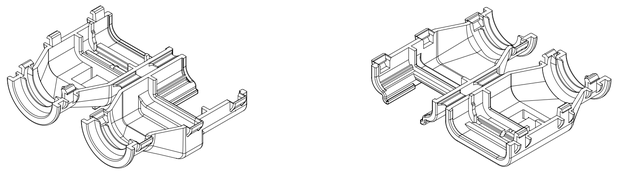

2X6 RECEPTACLE

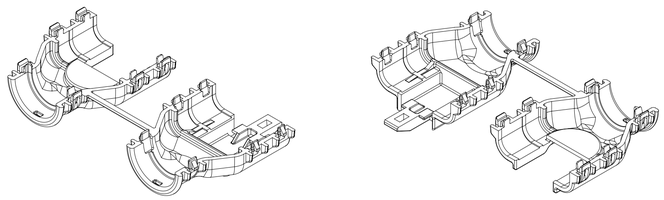

2X8 RECEPTACLE

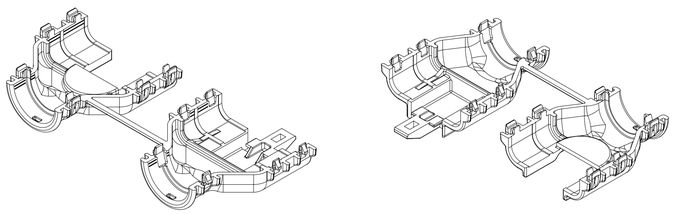

2X10 RECEPTACLE

BACKSHELL NOTES: VALID UNLESS OTHERWISE SPECIFIED

1. GENERAL:
a. APPLICATION SPECIFICATION SEE: AS-34951-001
-DESIGNED TO MATE WITH RECEPTACLE SEALED ASSEMBLY AS SPECIFIED IN SD-33472-0001.
-COMPONENTS ARE OPTIONAL AND MUST BE PURCHASED SEPERATELY
b. MOLEX PRODUCT SPECIFICATION SEE: TBD
-BACKSHELL DESIGN IS OWNED BY MOLEX.
c. OUTSOURCED MFG PRODUCT SPECIFICATION
-BACKSHELL DESIGN IS OWNED BY SCHLEMMER.
-THESE PRODUCTS ARE ONE TIME USE ONLY.
-REMOVAL FORCE OF THE BACKSHELL FROM THE MOLEX CONNECTOR TO BE 100N MIN.
-REMOVAL FORCE OF SLIT CONVOLUTE FROM THE WITH RIB OPTION BACKSHELLS TO BE 100N MIN.
-REMOVAL FORCE OF UNSLIT CONVOLUTE FROM THE WITH RIB OPTION BACKSHELLS TO BE 100N MIN.
d. PACKAGING SPECIFICATION: SEE BOM
e. PARTS MUST BE IN COMPLIANCE TO MOLEX CHEMICAL SUBSTANCES FOR PRODUCTS AND PACKAGING SPECIFICATION: QEHS-699000-300
f. DATA MUST BE SUBMITTED UNDER THE MOLEX PART NUMBER TO IMDS (COMPANY ID#13255)
g. FOLLOWING PRODUCTION CODES TO BE PRESENT
-DATE CODE
-MOLD CAVITY CODE
-MOLEX LOGO
-RECYCLE CODE
-SUPPLIER PART NUMBER - SCHLEMMER PARTS ONLY
h. CONNECTOR MUST HAVE CLIPSLOT FEATURE FOR USE WITH MOLEX BACKSHELLS

2. DESIGN - MATERIALS:
a. PA66 0% GLASS FILLED
b. BLACK

3. DESIGN GEOMETRY:
a. THIS IS A 100% CAD GENERATED PART. THE CAD MATHEMATICAL DATA IS THE MASTER FOR THIS PART. FOR DIMENSIONAL OR ANY INFORMATION NOT SHOWN ON THIS DRAWING, ANALYZE THE CAD MODEL.
b. GEOMETRIC DIMENSIONS AND TOLERANCES PER ASME Y14.5M - 2009.
c. CORNERS SHOWN AS SHARP TO BE R 0.1.
d. VISUAL DEFECTS SHALL MEET COSMETEIC STANDARD PS-45499-002 (CLASS C).
e. ALLOWABLE FLASH, PARTING LINES MISMATCH, EJECTOR PINS MARK, AND GATE VESTIGE TO BE +0.30 MAX PROTUSION.

BILL OF MATERIALS (BOM)

DESCRIPTION	PART NUMBER	CIRCUIT SIZE	COLOR	RIBS	CONVOLUTE SIZE	PACKAGING DRAWING NUMBER	STATUS	MANUFACTURER
2X3, WITH RIB	34951-0610	2X3	BLACK	YES	9 mm DELPHI	PK-31302-118	SALEABLE	OUTSOURCED MFG
2X3, WITHOUT RIB	34951-0620	2X3	BLACK	NO	9 mm DELPHI	PK-31302-118	SALEABLE	OUTSOURCED MFG
2X4, WITH RIB	34951-0811	2X4	BLACK	YES	NW 12 SCHLEMMER	349509000 PDD	SALEABLE	MOLEX
2X4, WITHOUT RIB	34951-0821	2X4	BLACK	NO	NW 12 SCHLEMMER	349509000 PDD	SALEABLE	MOLEX
2X6, WITH RIB	34951-1210	2X6	BLACK	YES	13 mm DELPHI	PK-31302-118	SALEABLE	OUTSOURCED MFG
2X6, WITHOUT RIB	34951-1220	2X6	BLACK	NO	13 mm DELPHI	PK-31302-118	SALEABLE	OUTSOURCED MFG
2X8, WITH RIB	34951-1611	2X8	BLACK	YES	NW 16 SCHLEMMER	349509000 PDD	SALEABLE	MOLEX
2X8, WITHOUT RIB	34951-1621	2X8	BLACK	NO	NW 16 SCHLEMMER	349509000 PDD	SALEABLE	MOLEX
2X10, WITH RIB	34951-2011	2X10	BLACK	YES	NW 16 SCHLEMMER	349509000 PDD	SALEABLE	MOLEX
2X10, WITHOUT RIB	34951-2021	2X10	BLACK	NO	NW 16 SCHLEMMER	349509000 PDD	SALEABLE	MOLEX

REV	REVISION DESCRIPTION
B10	ADDED BALLOON NUMBER TO PAGE 3 -SCHLEMMER PAGE
B9	CHANGED PARTS STATUS TO SALEABLE
B8	ADDED BALLOON NO. 90
B7	UPDATED BALLON NUMBERS
B6	UPDATED RIB AND WEDGE FEATURES
B3	UPDATED TOLERANCES
B2	ADDED BALLOONS & UPDATED BOM
B1	ADDED MOLEX PART NUMBERS
B	MIGRATION
A6	UPDATED BILL OF MATERIALS
A5	UPDATED STATUS COLUMN
A4	MINOR NOMENCLATURE CLEAN UP
A3	UPDATED VIEWSET & NOTES
A2	UPDATED REFERENCE DRAWINGS
A1	UPDATED NOTES
A	INITIAL RELEASE

INSPECTION NUMBER LOG
LAST NUMBER: 1 - 5
ADDED: 40 42 44 46 48 49 89 90 50 67
REMOVED: 40 44

THIS DRAWING CONTAINS INFORMATION THAT IS PROPRIETARY TO MOLEX ELECTRONIC TECHNOLOGIES, LLC AND SHOULD NOT BE USED WITHOUT WRITTEN PERMISSION

EC NO: 632862 2020/02/20
DRWN: PPALLAN 2020/02/26
CHK'D: MVANSLAMBROU 2020/02/26
APPR: MVANSLAMBROU

GENERAL TOLERANCES (UNLESS SPECIFIED)
ANGULAR TOL ± 3.0 °
4 PLACES ±
3 PLACES ±
2 PLACES ± 0.1
1 PLACE ± 0.2
0 PLACES ±
DRAFT WHERE APPLICABLE MUST REMAIN WITHIN DIMENSIONS

DIMENSION UNITS: mm
SCALE: 1:1
DRWN BY: DAHALL DATE: 2013/03/27
CHK'D BY DATE
APPR BY: VKOSHY DATE: 2013/04/08
DRAWING SIZE: A1
THIRD ANGLE PROJECTION

molex®

MX150 DUAL ROW RECPT BACKSHELLS

PRODUCT CUSTOMER DRAWING

SERIES: 34951
MATERIAL NUMBER
CUSTOMER: GENERAL MARKET
DOCUMENT NUMBER: SD-34951-0001
DOC TYPE: PSD
DOC PART: 001
SHEET NUMBER: 1 OF 4

REV: B10

RELEASE STATUS	P1	RELEASE DATE	2020/02/26 00:51:11

TEMPLATE NAME: SCHEMATIC
REVISION: 01
DATE: 2017/10/06

SHEET DESCRIPTION
CONFIGURATIONS

WITH RIB

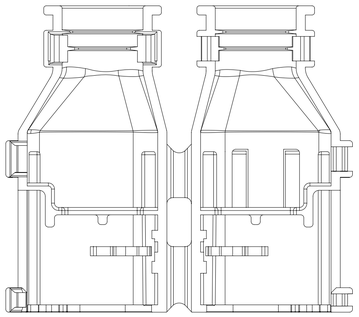

2X3
SCHLEMMER

WITHOUT RIB

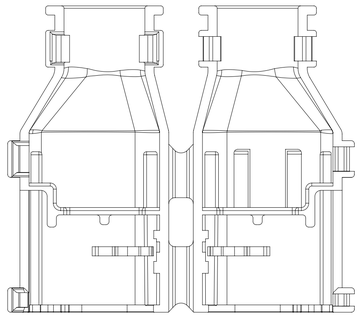

2X3
SCHLEMMER

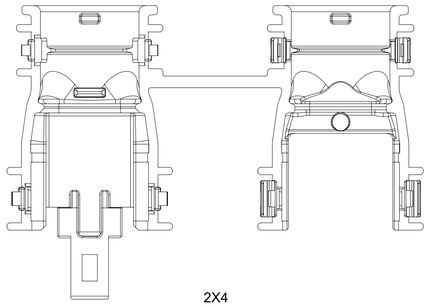

2X4
MOLEX

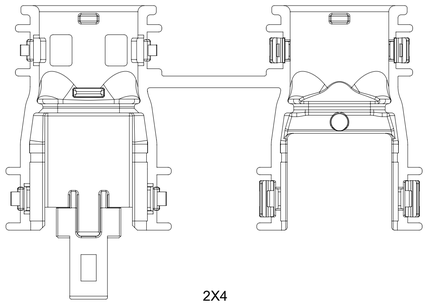

2X4
MOLEX

WITH RIB

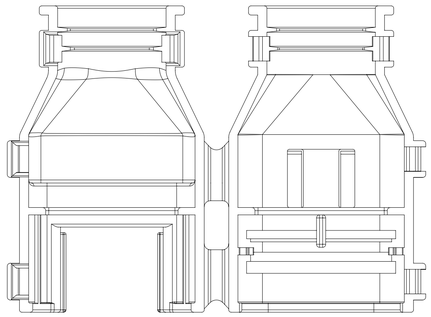

2X6
SCHLEMMER

WITHOUT RIB

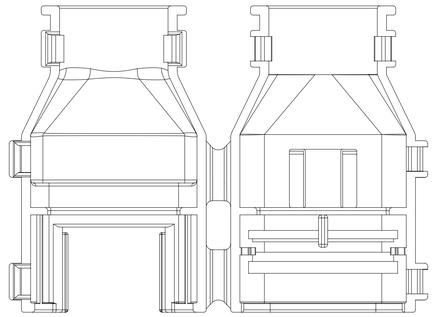

2X6
SCHLEMMER

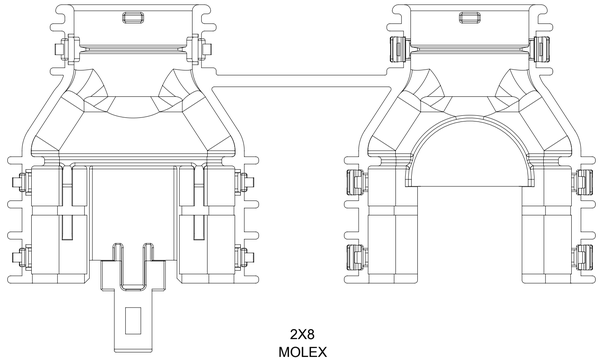

2X8
MOLEX

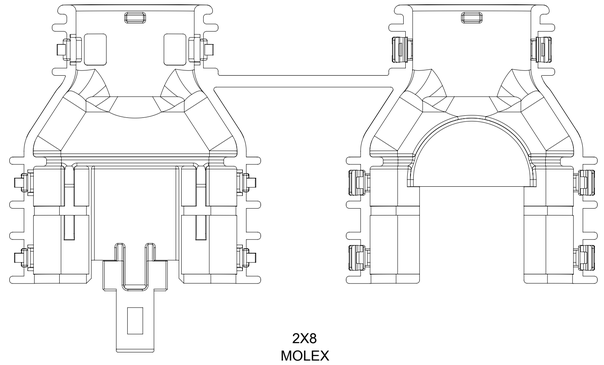

2X8
MOLEX

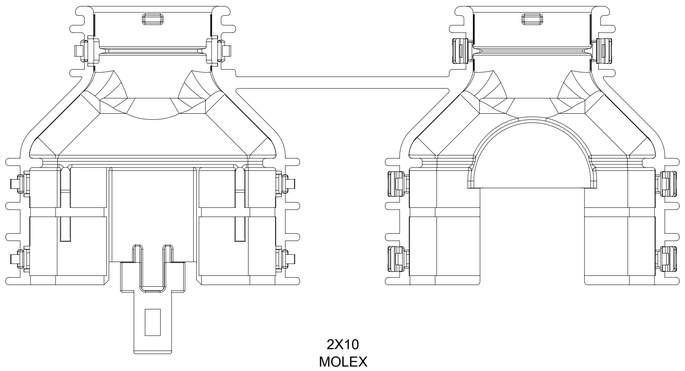

2X10
MOLEX

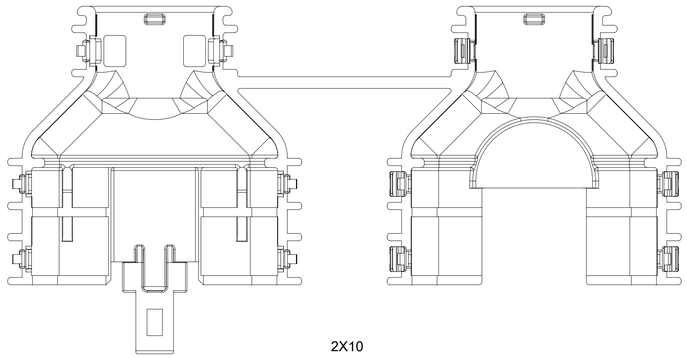

2X10
MOLEX

THIS DRAWING CONTAINS INFORMATION THAT IS PROPRIETARY TO MOLEX ELECTRONIC TECHNOLOGIES, LLC AND SHOULD NOT BE USED WITHOUT WRITTEN PERMISSION

EC NO: 632862 2020/02/20
DRWN: PPALLAN 2020/02/26
CHK'D: MVANSLAMBROU 2020/02/26
APPR: MVANSLAMBROU

GENERAL TOLERANCES (UNLESS SPECIFIED)

ANGULAR TOL	± 3.0	°
4 PLACES	±	
3 PLACES	±	
2 PLACES	± 0.1	
1 PLACE	± 0.2	
0 PLACES	±	

DRAFT WHERE APPLICABLE MUST REMAIN WITHIN DIMENSIONS

REV B10

DIMENSION UNITS: mm
SCALE: 2:1
DRWN BY: DAHALL DATE: 2013/03/27
CHK'D BY DATE
APPR BY: VKOSHY DATE: 2013/04/08
DRAWING SIZE: A1
THIRD ANGLE PROJECTION

molex®

MX150 DUAL ROW RECPT BACKSHELLS

PRODUCT CUSTOMER DRAWING

SERIES	MATERIAL NUMBER	CUSTOMER
34951		GENERAL MARKET

DOCUMENT NUMBER	DOC TYPE	DOC PART	SHEET NUMBER
SD-34951-0001	PSD	001	2 OF 4

RELEASE STATUS	P1	RELEASE DATE	2020/02/26 00:51:11

FORMAT: molex-tb-prod-A1-
DEPARTM: 15
DATE: 2013/02/06

SHEET DESCRIPTION
SCHLEMMER BACKSHELL DETAIL

CHARTED DIMENSION						
DESCRIPTION	DIMENSIONS					
	A	B	C	D	E	F
2X3, WITH RIB	50.00	13.20	9.75	3.93	0.65	2.74
2X3, WITHOUT RIB	50.00	13.20	N/A	N/A	N/A	N/A
2X4, WITH RIB	TBD	TBD	TBD	TBD	TBD	TBD
2X4, WITHOUT RIB	TBD	TBD	TBD	TBD	TBD	TBD
2X6, WITH RIB	50.00	17.70	13.60	3.50	0.83	3.10
2X6, WITHOUT RIB	50.00	17.70	N/A	N/A	N/A	N/A

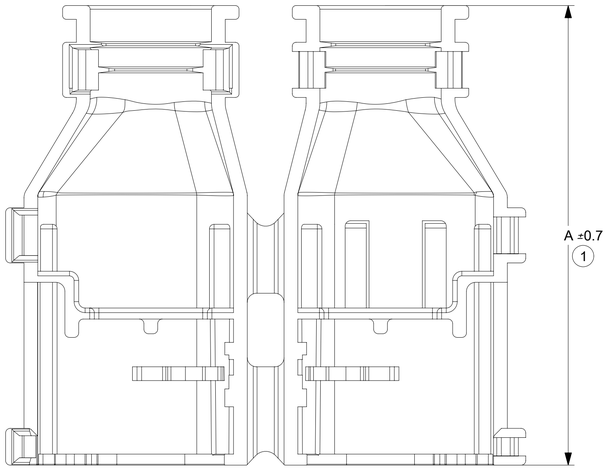

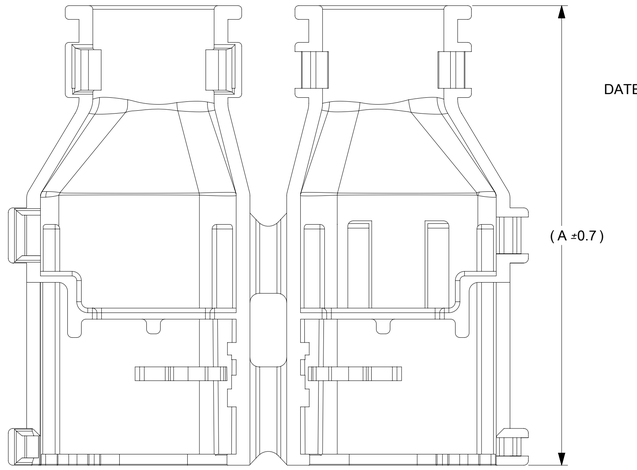

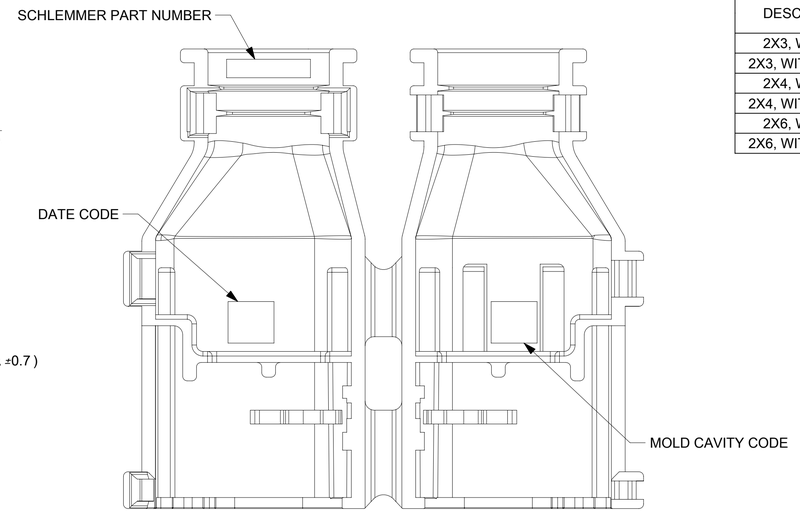

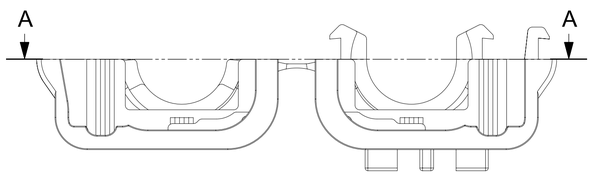

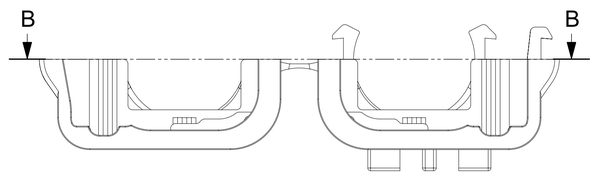

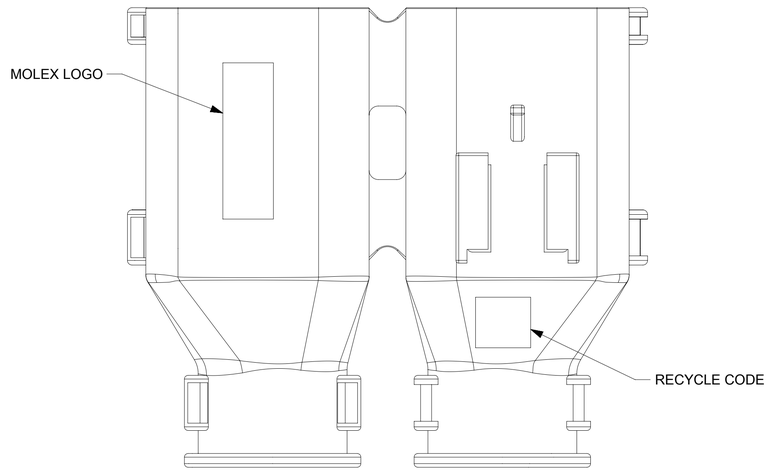

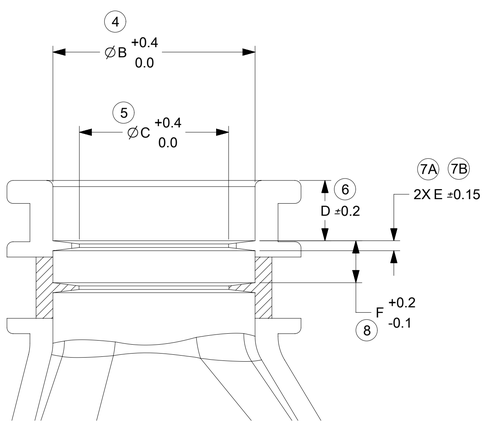

PARTIAL SECTION A-A

SCALE 5:1
WITH RIBS

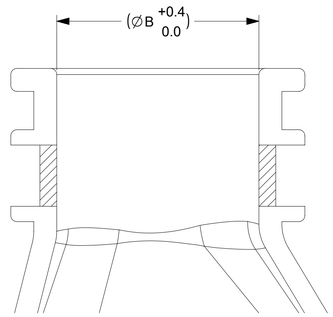

PARTIAL SECTION B-B

SCALE 5:1
WITHOUT RIBS

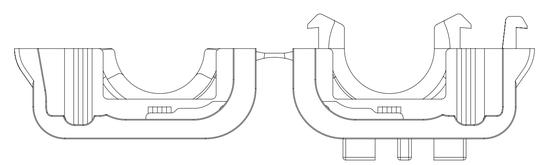

THIS DRAWING CONTAINS INFORMATION THAT IS PROPRIETARY TO MOLEX ELECTRONIC TECHNOLOGIES, LLC AND SHOULD NOT BE USED WITHOUT WRITTEN PERMISSION.

EC NO: 632862	DRWN: PPALLAN	CHK'D: MVANSLAMBROU	APPR: MVANSLAMBROU
2020/02/20	2020/02/26	2020/02/26	2020/02/26

GENERAL TOLERANCES (UNLESS SPECIFIED)

ANGULAR TOL ±	3.0	°
4 PLACES	±	
3 PLACES	±	
2 PLACES	±	0.1
1 PLACE	±	0.2
0 PLACES	±	

DRAFT WHERE APPLICABLE MUST REMAIN WITHIN DIMENSIONS

DIMENSION UNITS	mm
SCALE	3:1
DRWN BY	DAHALL
DATE	2013/03/27
CHK'D BY	
DATE	
APPR BY	VKOSHY
DATE	2013/04/08
DRAWING SIZE	A1
THIRD ANGLE PROJECTION	

molex®

MX150 DUAL ROW RECPT BACKSHELLS

PRODUCT CUSTOMER DRAWING

SERIES	MATERIAL NUMBER	CUSTOMER
34951		GENERAL MARKET

DOCUMENT NUMBER	DOC TYPE	DOC PART	SHEET NUMBER
SD-34951-0001	PSD	001	3 OF 4

REV	
B10	

RELEASE STATUS	P1	RELEASE DATE	2020/02/26 00:51:11

COPYRIGHT - creation-file printed on :
REV-ACADR: 7c
DATE: 2017/02/08

SHEET DESCRIPTION
MOLEX BACKSHELL DETAIL

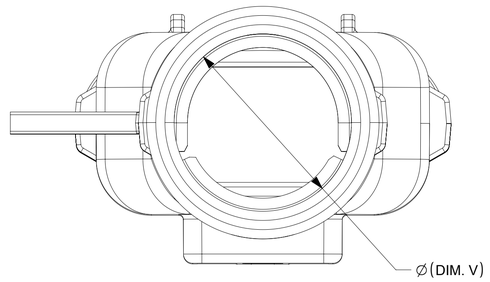

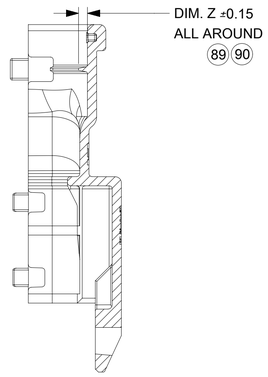

SECTION E-E

CHARTED DIMENSION								
DESCRIPTION	DIMENSIONS							
	V	H	J	K	L	M	N	Z
2X4, WITH RIB	16.10	36.80	48.11	16.10	0.80	N/A	N/A	**1.35**
2X4, WITHOUT RIB	16.10	36.80	48.11	16.10	N/A	3.60	5.10	**N/A**
2X8, WITH RIB	19.30	45.60	56.91	19.30	0.80	N/A	N/A	**1.45**
2X8, WITHOUT RIB	19.30	45.60	56.91	19.30	N/A	3.60	5.10	**N/A**
2X10, WITH RIB	19.30	45.60	56.91	19.30	0.80	N/A	N/A	**1.45**
2X10, WITHOUT RIB	19.30	45.60	56.91	19.30	N/A	3.60	5.10	**N/A**

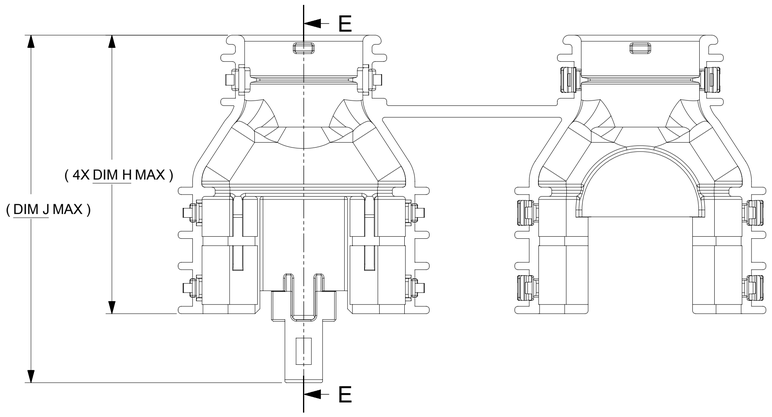

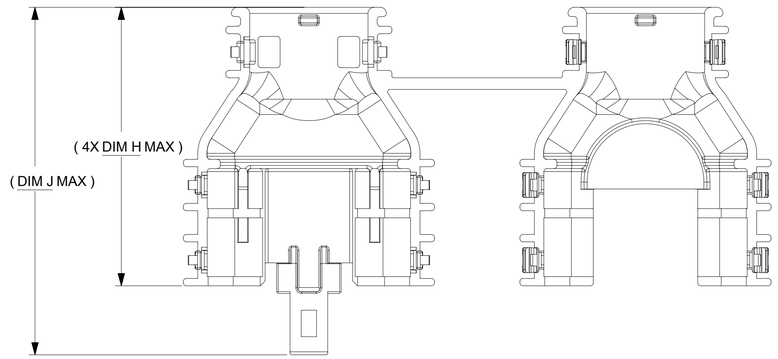

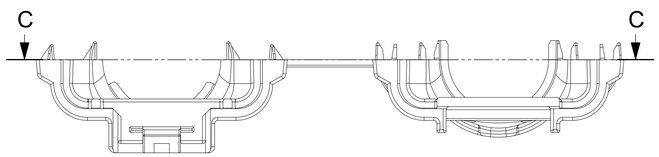

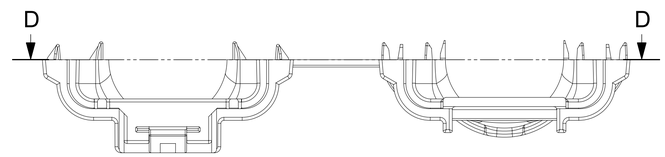

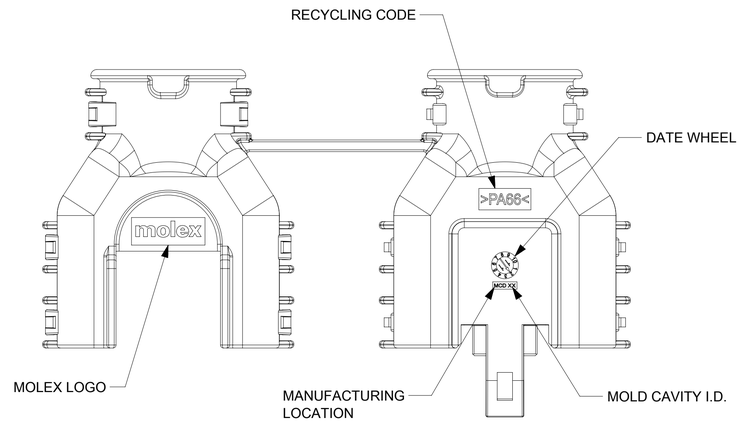

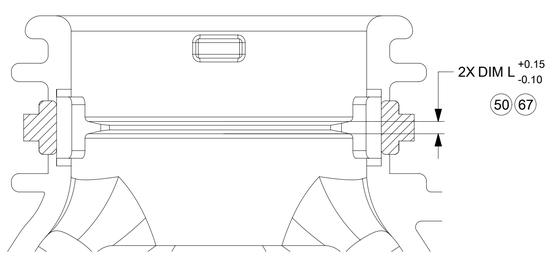

PARTIAL SECTION C-C

SCALE 5:1
WITH RIBS

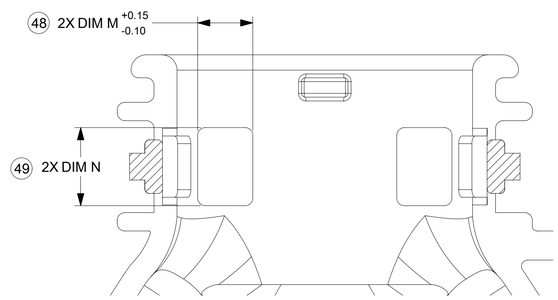

PARTIAL SECTION D-D

SCALE 5:1
WITHOUT RIBS

THIS DRAWING CONTAINS INFORMATION THAT IS PROPRIETARY TO MOLEX ELECTRONIC TECHNOLOGIES, LLC AND SHOULD NOT BE USED WITHOUT WRITTEN PERMISSION

EC NO: 632862	DRWN: PPALLAN 2020/02/20	CHK'D: MVANSLAMBROU 2020/02/26	APPR: MVANSLAMBROU 2020/02/26

GENERAL TOLERANCES (UNLESS SPECIFIED)

ANGULAR TOL ±	3.0	°
4 PLACES	±	
3 PLACES	±	
2 PLACES	±	0.1
1 PLACE	±	0.2
0 PLACES	±	

DRAFT WHERE APPLICABLE MUST REMAIN WITHIN DIMENSIONS

DIMENSION UNITS	SCALE
mm	2:1
DRWN BY: DAHALL	DATE: 2013/03/27
CHK'D BY	DATE
APPR BY: VKOSHY	DATE: 2013/04/08
DRAWING SIZE: A1	THIRD ANGLE PROJECTION

molex®

MX150 DUAL ROW RECPT BACKSHELLS

PRODUCT CUSTOMER DRAWING

SERIES	MATERIAL NUMBER	CUSTOMER
34951		GENERAL MARKET

DOCUMENT NUMBER	DOC TYPE	DOC PART	SHEET NUMBER
SD-34951-0001	PSD	001	4 OF 4

REV: B10

RELEASE STATUS	P1	RELEASE DATE	2020/02/26 00:51:11