Jun.1.2023 Copyright 2023 HIROSE ELECTRIC CO., LTD. All Rights Reserved.
In case of consideration for using Automotive equipment / device which demand high reliability, kindly contact our sales window correspondents.

	COUNT	DESCRIPTION OF REVISIONS	BY	CHKD	DATE		COUNT	DESCRIPTION OF REVISIONS	BY	CHKD	DATE
△					. .	△					. .
△					. .	△					. .
△					. .	△					. .

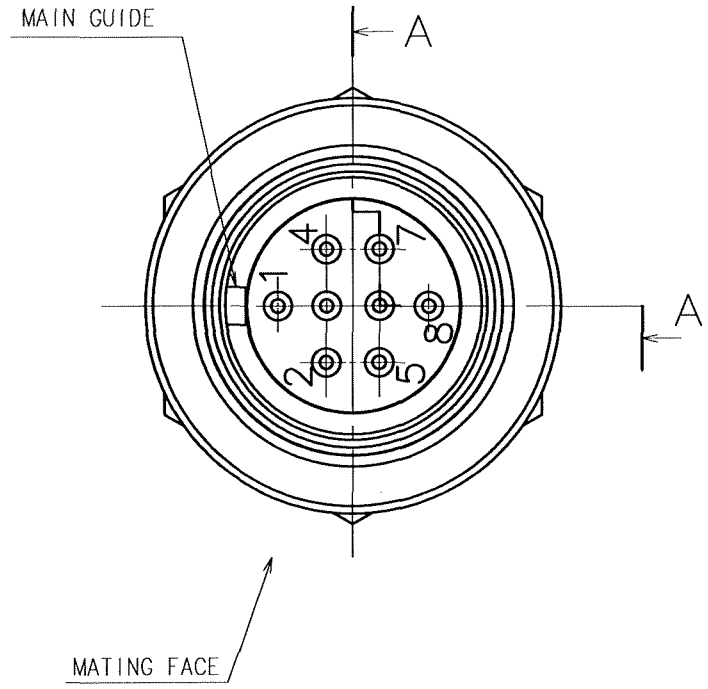

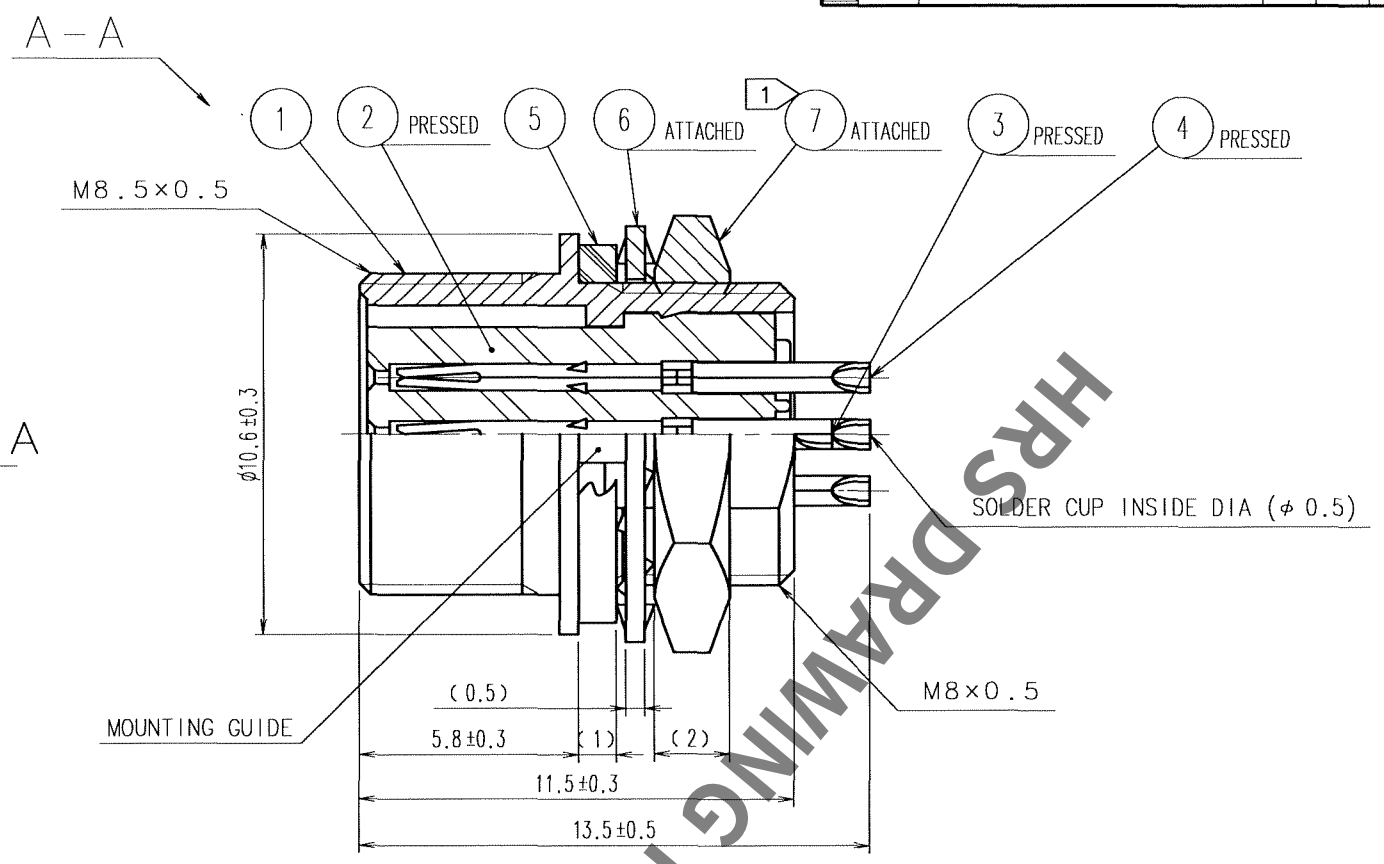

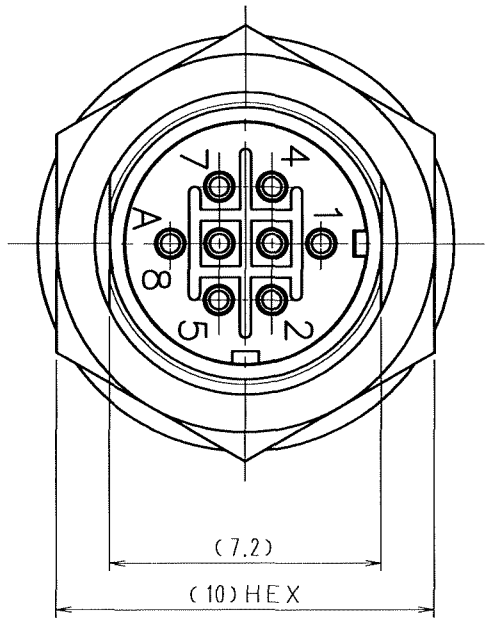

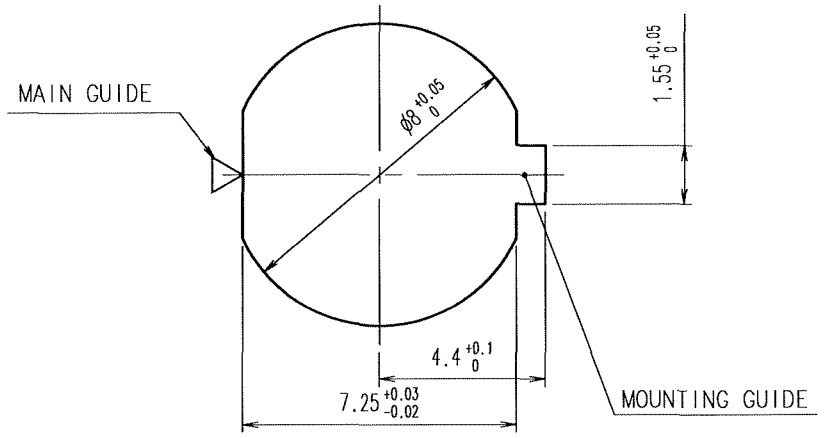

PANEL CUTOUT
(PANEL THICKNESS 0.7 TO 2)

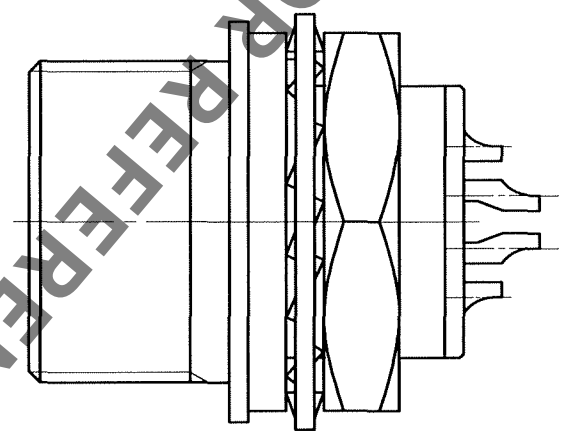

HRS DRAWING FOR REFERENCE

NOTES 1 THE RECOMMENDED TIGHTENING TORQUE OF REF.No. 7 TO BE 1 N·m.
COATING WITH LOCTITE 242 MANUFACTURED BY HENKEL JAPAN OR EQUIVALENT IS RECOMMENDED TO PREVENT LOOSENESS.
2 CONTACT AREA : GOLD 0.2μm min.
TERMINAL AREA : GOLD FLASH
UNDER PLATING : NICKEL 2μm min.

NO.	MATERIAL	FINISH, REMARKS	NO.	MATERIAL	FINISH, REMARKS
4	PHOSPHOR BRONZE	2			
3	PHOSPHOR BRONZE	2	7	BRASS	NICKEL PLATING
2	PPS	(BLACK) UL94V-0	6	PHOSPHOR BRONZE	NICKEL PLATING
1	ZINC ALLOY	MATTE FINISH NICKEL PLATING	5	EPDM	(BLACK)

CODE NO.(OLD)	DRAWN	DESIGNED	CHECKED	APPROVED	RELEASED
CL	H.Kawashima 05.11.29	H.Kawashima 05.11.29	T.Akiyama 05.11.29	M.Sato 05.11.30	. .

SCALE 5 : 1	DRAWING NO. EDC3-047696-73	PART NO. HR25-7TR-8S(73)
UNITS mm	HRS HIROSE ELECTRIC CO., LTD	CODE NO. CL125-0011-1-73 1/1

TO
R