DRAWING MADE IN THIRD ANGLE PROJECTION

THIS DRAWING IS UNPUBLISHED. | RELEASED FOR PUBLICATION ,19 .

© COPYRIGHT 19 BY AMP INCORPORATED. ALL INTERNATIONAL RIGHTS RESERVED.

LOC	DIST	P	F
CM	53		

REVISIONS

ZONE	LTR	DESCRIPTION	DATE	APPD
	0	RLSD PER PR CM 93-25	3-4-93	KS / RS

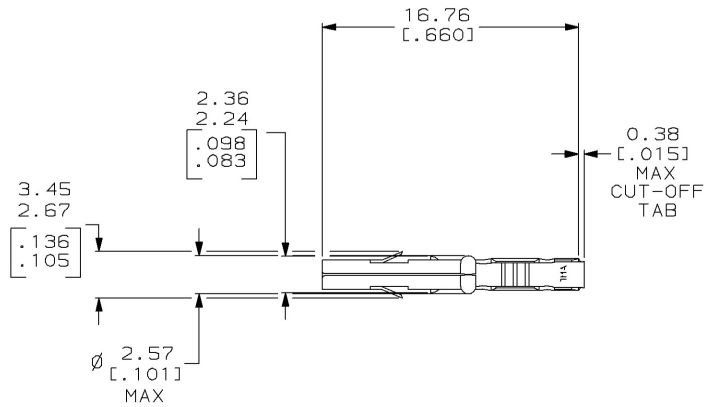

1. PLATED INTERNALLY WITH 0.00076 [.000030] GOLD, GOLD FLASH ON THE REMAINDER, OVER 0.00127 [.000050] NICKEL.
2. THIS CONTACT MATES WITH MR LIVE SPLIT PIN ONLY.
3. DIMENSIONS IN BRACKETS ARE IN INCHES.

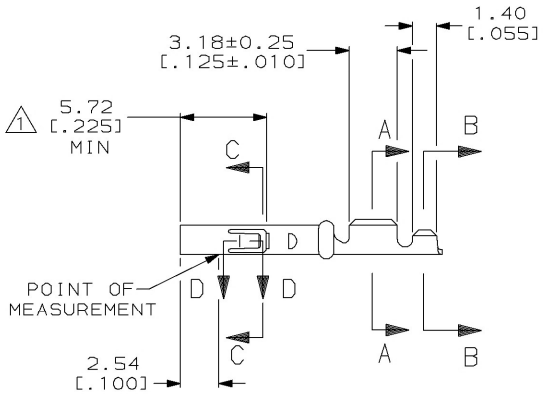

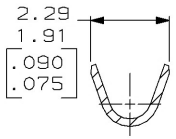

SECTION A–A
SCALE 10:1

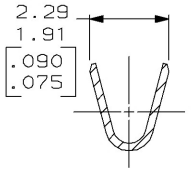

SECTION B–B
SCALE 10:1

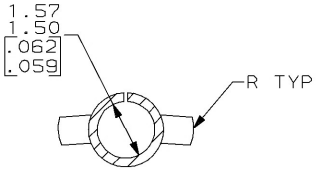

SECTION C–C
SCALE 10:1

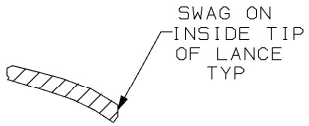

SECTION D–D
SCALE 10:1

794001

FINISH	MATERIAL	PART NO
GOLD 1	0.20 [.008] PH BRZ	794001-2
PRE-TIN	0.20 [.008] PH BRZ	794001-1

DO NOT SCALE PRINT.
UNLESS SPECIFIED
DIMENSIONS IN mm [INCHES]
TOLERANCES ON :
2 PLC DEC ± 0.13 [.005]
3 PLC DEC ± -
ANGLES ± -

MATERIAL: SEE TABLE

FINISH: SEE TABLE

DR 3-4-93 K. SALMON
CHK 3-4-93 R. SWING
APPD 3-4-93 J. ANDREW
APPD 3-4-93 J. ANDREW
PRODUCT SPEC -
APPLICATION SPEC -
WEIGHT -

AMP Incorporated
Harrisburg, PA 17105-3608

NAME: RECEPTACLE, LOOSE PIECE, MR

SIZE: C | CAGE CODE: 00779 | DRAWING NO: C-794001

SCALE: 4:1 | SHEET: 1 OF 1

METRIC

THIS DRAWING IS A CONTROLLED DOCUMENT FOR AMP INCORPORATED. IT IS SUBJECT TO CHANGE AND THE CONTROLLING ENGINEERING ORGANIZATION SHOULD BE CONTACTED FOR THE LATEST REVISION.

CUSTOMER DRAWING

AMP 1471-6 REV 3-92

A/C BUSINESS GROUP: 3323 177-34 KIM SALMON

04 MAR 1993 10:33:45 AMP23993 <CE079B>DEPT3323>AMP23993>U.PR93-25