DWG NO.	SH	REV
C-NDCCMG-0099	1	C

TABLE 1	
AHSP P/N	LENGTH "A"
NDCCMG-0001	1000 ±25
NDCCMG-0002	2000 ±50
NDCCMG-0003	2500 ±50

REVISIONS

ZONE	REV.	ECN	DESCRIPTION	BY	DATE	APPROVED
	A	DCAE-18022102	NEW RELEASE	DC	2/21/2018	DC
	B	MKHN-19012801	REVISED PCBA AND OTHER ITEMS ON BOM	HCL-SH	01/30/2019	M.HUSSAIN
	C	BZHU-20040301	ADD REF DIMENSION	R.LI	04/24/2020	W.ZHANG

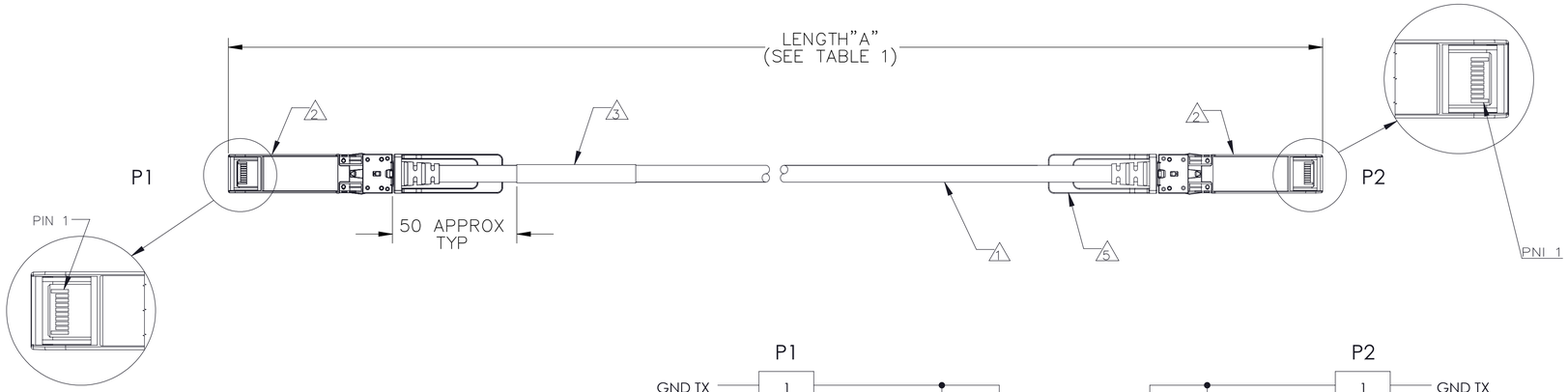

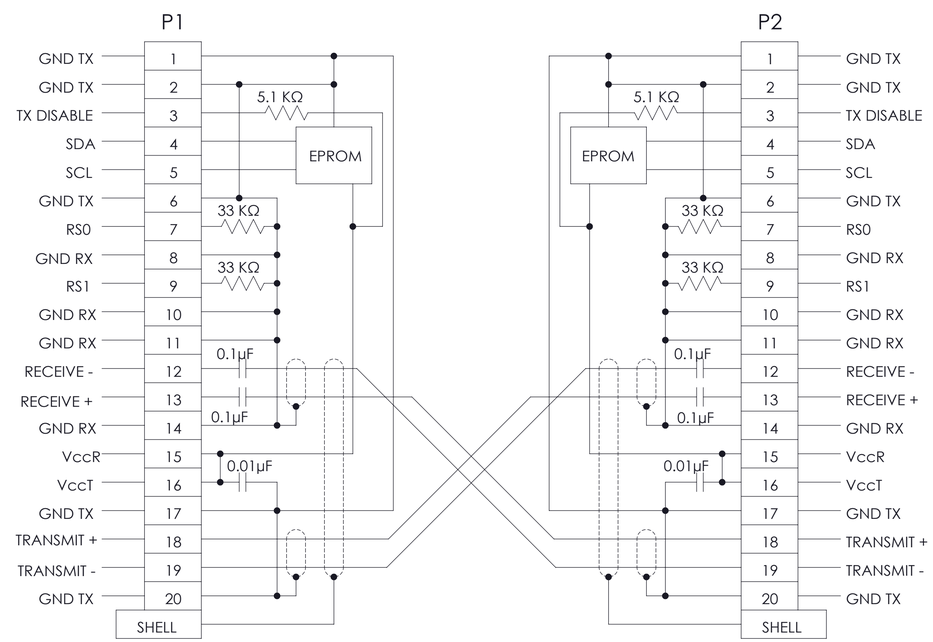

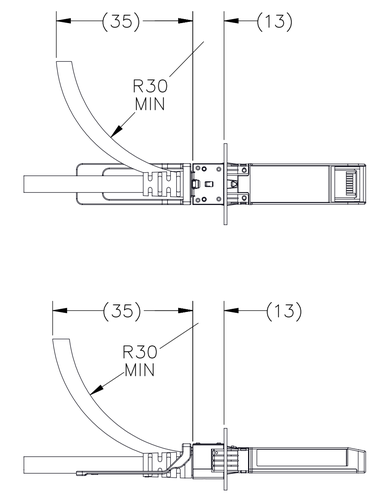

BEND DISTANCE FROM EDGE OF DIECAST

TABLE 2	
ITEM No.	DESCRIPTION
1	28 AWG, 2-PR., PVC BLACK, AWM STYLE 20276 80°C VW-1
2	PLUG, SFP+, REFERENCE SFF-8432, PULL TO RELEASE
3	LABEL, WRAPPED - AHSP P/N, REV, DATE CODE, LENGTH, CoO, & SERIAL NUMBER
5	LANYARD, BLUE

8. UL LABEL MUST BE ON SHIPPING CARTON PER SUBJECT 764 OF THE UL COMPONENT WIRING HARNESS (ZPFW2) FILE #E86140. CSA LABEL MUST BE ON SHIPPING CARTON.
7. PACKAGE COMPLETED ASSY IN AN APPROPRIATELY SIZED ESD BAG.
6. EPROM CONTENT SHALL BE COMPLIANT WITH SFF-8472 SPECIFICATION. EPROM REVISION IS EQUAL TO AHSP PART NUMBER REVISION UNLESS OTHERWISE NOTED.
5. ASSEMBLIES LESS THAN ONE METER REQUIRE ONLY ONE LABEL PLACED ON P1 END.
4. CABLE ASSEMBLIES MUST MEET SHIELDING EFFECTIVENESS REQUIREMENTS OF 35dB MINIMUM FROM 1-10GHz AND 30dB FROM 10-18 GHz.
3. CABLE ASSEMBLIES, COMPONENTS AND SUB-COMPONENTS SHALL BE COMPLIANT TO EU DIRECTIVE 2011/65/EU-RoHS2.
2. ASSEMBLIES SHALL BE COMPLIANT TO SFF-8431 (APPENDIX E) AND IEEE 802.3cd 50GBASE-CR SPECIFICATION.
1. THIS DRAWING IS RESERVED FOR AMPHENOL STANDARD PRODUCT.

NOTES: UNLESS OTHERWISE SPECIFIED

Amphenol RoHS 2011/65/EU

TOLERANCES	
0.0	± 0.25
0.00	± 0.08
0.000	± —
ANGLES	± 1.0°

UNLESS OTHERWISE SPECIFIED DIMENSIONS ARE IN MM

DWN	2/20/2018	DC
CHK	2/20/2018	DD
APVD	2/20/2018	EM

Amphenol AHSP
A Division of Amphenol Corporation
200 Innovative Way, Suite 201, Nashua, N.H. 03062 (603) 879-3000

TITLE: CABLE ASSEMBLY, SFP28, 50GbE, PAM4, PASSIVE, 100Ω, 28 AWG EXD

INTERPRET PER ASME Y14.5

CODE IDENT 31413

CUSTOMER USE DRAWING

PART NO.	REV
SEE TABLE 1	N/A
DRAWING NO. C-NDCCMG-0099	REV C

SIZE D SCALE 1:1 SHEET 1 OF 1

DWG NO. C-NDCCMG-0099 SH 1 REV C

AHSP_szD_mm.drwdot Rev01/201409