DWG STATUS					ZONE	REVISION HISTORY	AUTH	DR	APVD 1	APVD 2
DATE	STG	REV	N/P	CHG						
15DE21	R	01				INITIAL RELEASE		M.KLE	S.RAN	T.BOL

SECTION A-A

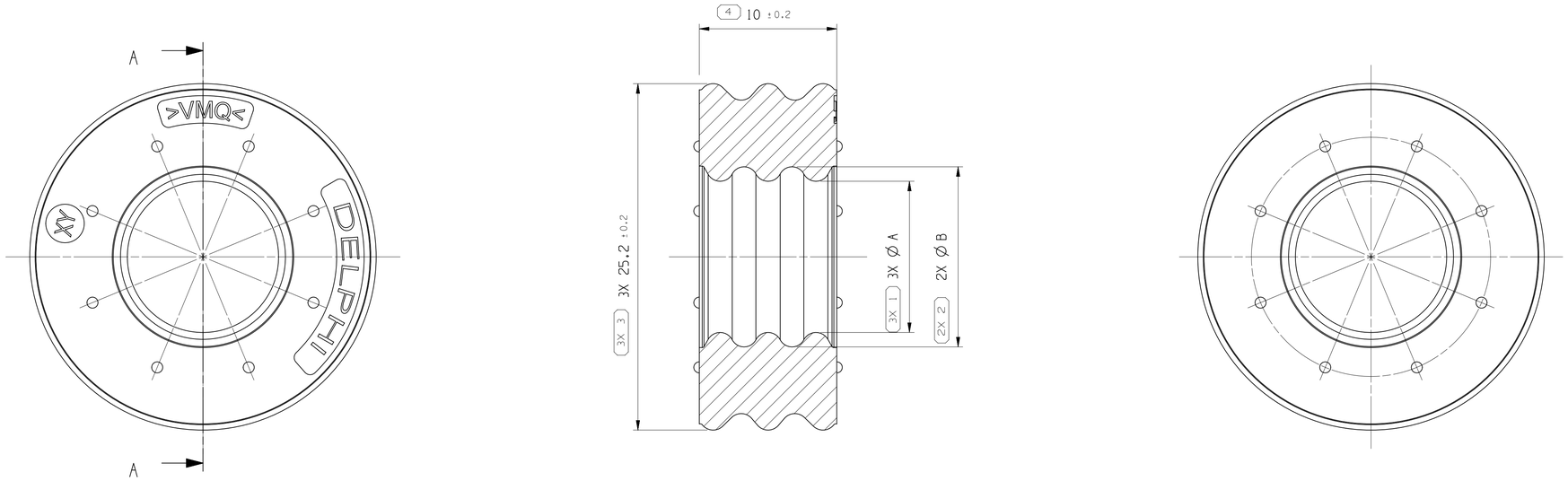

SCALE: 2:1

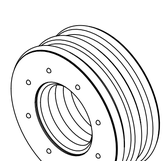

NOTES	
1	NOT DIMENSIONED GEOMETRY HAS TO BE TAKEN FROM THE CORRESPONDING 3D DATA FILE
2	MATERIAL SPECIFICATION: SILICONE, AUTOLUBRICATION
3	TENSILE STRENGTH : RM MIN 6.2 N/MM²
4	ELONGATION : 375% DIN 53504-S2
5	DUROMETER ORIGINAL: SHORE(A) 50±5 DIN53505
6	MEASURE ON TEST SLABS
7	SHOWN IS 35095204

A ——— LINE DRAWN THROUGH A PART NUMBER INDICATES THAT PHYSICAL PARTS ARE NOT AVAILABLE FOR ORDERING.

PART NUMBERS THAT DO NOT HAVE A LINE PRESENT INDICATE THAT PHYSICAL PARTS ARE AVAILABLE FOR ORDERING.

CONTACT APTIV SALES TO ASSURE AVAILABILITY OF PARTS.

R 0.1 MAX
R 0.2 MAX
SHARP CORNER TOLERANCE

	DIMENSIONAL RANGE (MM)				CHART C
DIM TO CHECK	FROM	>0	>25	>60	>80
( ) DIM FOR HELP	TO	25	60	80	
	TOLERANCE UNLESS OTHERWISE SPECIFIED				
THEORETIC DIM		±0.3	±0.5	±0.6	±0.75%
	ANGULAR TOLERANCE ±2°				

DWG TYP
PART DRAWING

WEIGHT (GR)
SEE TABLE

VOLUME (CM³)
SEE TABLE

ROUTING

DISTR CODE
D

UNLESS OTHERWISE SPECIFIED

GENERAL TOLERANCES ACCORDING TO: SEE CHART

GD&T ACCORDING TO: ISO 1101 ISO 8015

REFERENCE

FIRST ANGLE PROJECTION

DO NOT SCALE

USE MATH DATA

CAD NX

•APTIV•

CONNECTION SYSTEMS
KRAKOW, POLAND

COPYRIGHT 2021 APTIV. ALL RIGHTS RESERVED.

THIS DRAWING IS THE PROPERTY OF APTIV AND CONTAINS APTIV CONFIDENTIAL INFORMATION. THE REPRODUCTION, DISTRIBUTION AND UTILIZATION OF THIS DOCUMENT OR ITS RELATED CAD MATH DATA, AS WELL AS COMMUNICATION OF ANY CONTENT TO OTHERS, WITHOUT EXPRESS AUTHORIZATION, IS PROHIBITED.

		DATE
DR	M.KLEJDYSZ	15DE21
APVD1	S.RANGASAMY	15DE21
APVD2	T.BOLTE	15DE21
APVD3		
APVD4		
APVD5		

SUBSTANCES OF CONCERN AND RECYCLED CONTENT PER APTIV 10949001

MATERIAL
SEE TABLE

DRAWING NAME
SINGLE WIRE SEAL

DRAWING NUMBER
35049932

SIZE	SCALE	FRAME NO	SHEET NO	STG	REV	N/P
A1	5:1	1 OF 1	1 OF 1	R	01	-

SL.NO	TITLE	CAVITY DIAMETER Ø	CABLE SIZE [mm²]	PART-NO. / SEAL WIRE SEAL	PART-REV.	INSULATION DIAMETER [mm]	WEIGHT [g]	VOLUME [cm³]	MATERIAL	COLOR	SIM. TO RAL	MATERIAL SPEC.	A ±0.2	B ±0.2
3	SEAL	24.0	50	35095204	01	Ø 11.5-12.8	3.8	3.4	SILICONE 50 SHORE 2%	WHITE	9010	M3469011	11.0	13.1
2			35 SHIELDED	35049931		Ø 12.5-13.5	3.7	3.3		MAIZE	1006	M3469035	11.9	14.0
1			35	35093138		Ø 9.8-11.0	4.3	3.8		GRAY	7000	M3469003	9.1	11.2
													DIMENSIONS	

CONTROLLED DOCUMENTS ARE ONLY AVAILABLE ON THE SERVER