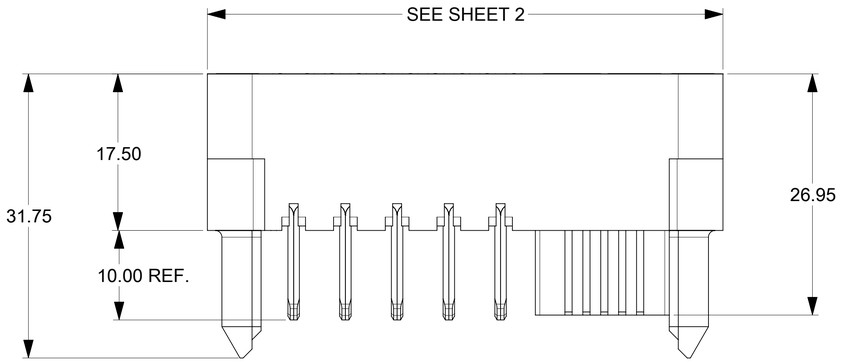

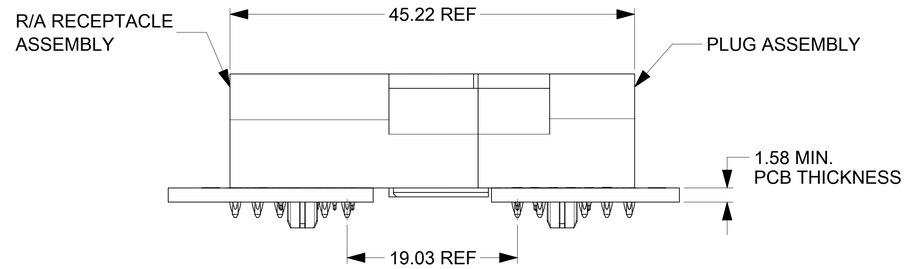

PLUG MATED TO R/A RECEPTACLE MATED PROFILE

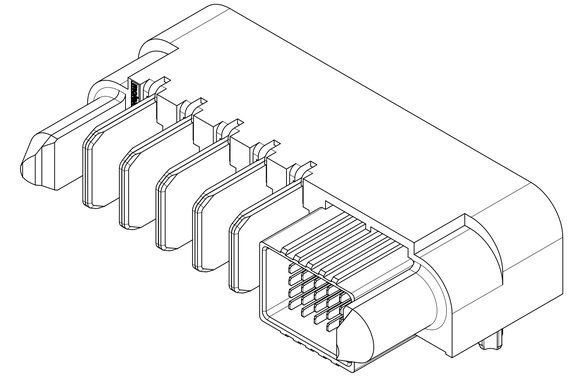

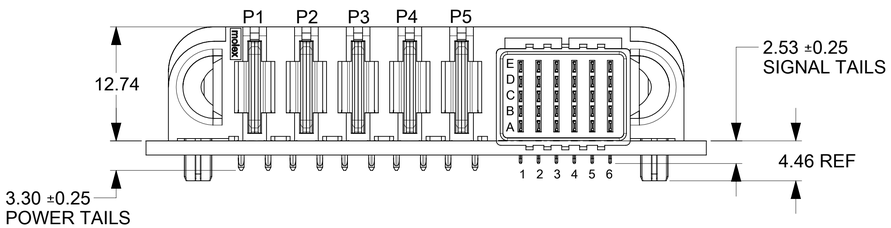

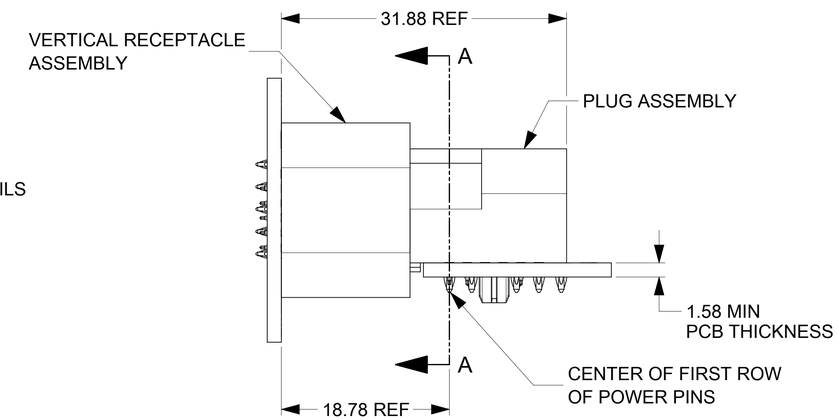

PLUG MATED TO VERTICAL RECEPTACLE MATED PROFILE

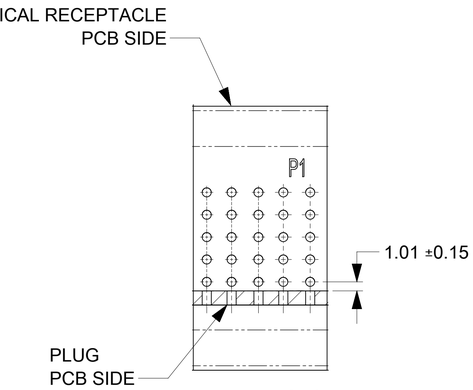

SECTION A-A
(POWER CKTS ARE ALIGNED)

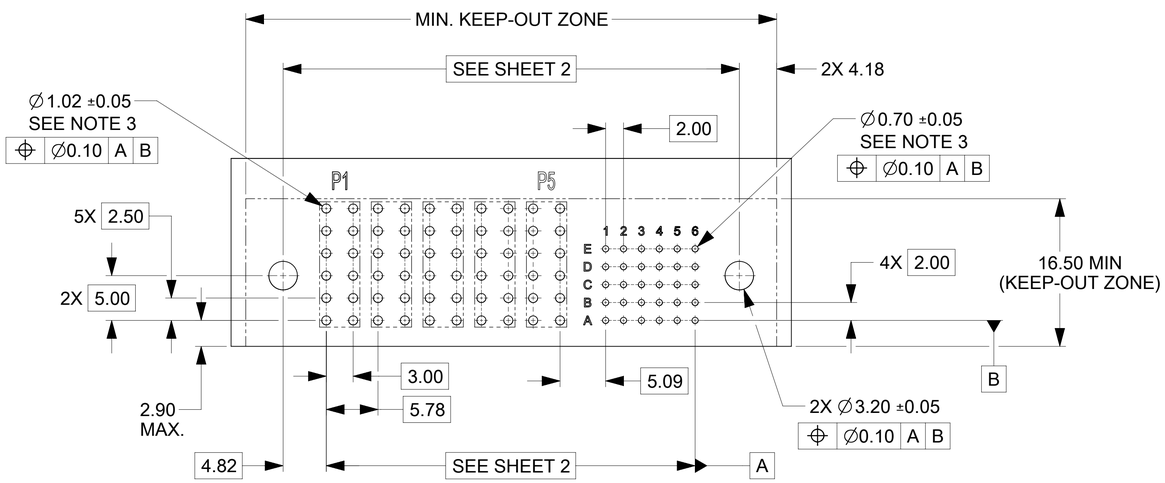

RECOMMENDED PCB LAYOUT AND KEEP-OUT ZONE

NOTES:
1. MATERIAL:
   -HOUSINGS: LCP UL94, V-0, COLOR : BLACK
   -TERMINALS: HIGH CONDUCTIVITY COPPER ALLOY
   -PLATING: 1.27 µm (50 µin) NICKEL OVERALL WITH
   2.54 µm (100 µin) SELECTIVE TIN ON TAILS AND
   0.762 µm (30 µin) SELECTIVE GOLD ON CONTACT AREA
2. PACKAGING: ASSEMBLIES TO BE TRAY PACKED PER PACKAGING SPEC: 2141130010-PK.
3. PLATED THRU HOLE SIZE, REFER TO PRODUCT SPEC. FOR DETAILS.
4. PRODUCT SPEC: 2141130000-PS.
5. PRODUCT TO MEET RoHS REQUIREMENTS.
6. PLUG ASSEMBLY MATES TO MOLEX RECEPTACLES 219563XXXX-SD AND 219564XXXX-SD, SEE DRAWINGS FOR DETAILS.
7. TAIL DESIGN: COMPLIANT PIN.
8. POWER TERMINALS AND SIGNALS ARE LUBRICATED.
9. APPLICATION SPECIFICATION: 2141130000-AS (FOR COMPLIANT TAILS ONLY).

THIS DRAWING CONTAINS INFORMATION THAT IS PROPRIETARY TO MOLEX ELECTRONIC TECHNOLOGIES, LLC AND SHOULD NOT BE USED WITHOUT WRITTEN PERMISSION

DIMENSION UNITS	SCALE
mm	3:1

GENERAL TOLERANCES (UNLESS SPECIFIED)

ANGULAR TOL	±	°
4 PLACES	±	
3 PLACES	±	
2 PLACES	±	0.25
1 PLACE	±	0.3
0 PLACES	±	

DRAFT WHERE APPLICABLE MUST REMAIN WITHIN DIMENSIONS

CURRENT REV DESC:

EC NO: 745288
DRWN: LZABJANOVSKI 2023/03/09
CHK'D: JAYK1 2023/04/10
APPR: JAYK1 2023/04/10

INITIAL REVISION:
DRWN: LZABJANOVSKI 2022/03/14
APPR: BPISZCZOR 2022/08/04

molex

GUARDIAN HD RA PLUG RIGHT SIGNAL WITH POWER PF

PRODUCT CUSTOMER DRAWING

DOCUMENT NUMBER	DOC TYPE	DOC PART	REVISION
2195629001-SD	PSD	000	A1

THIRD ANGLE PROJECTION	DRAWING	SERIES	MATERIAL NUMBER	CUSTOMER	SHEET NUMBER
	D-SIZE	219562	SEE CHART		1 OF 2

DOCUMENT STATUS	P1	RELEASE DATE	2023/04/11 17:04:40

FORMAT: master-ts-prod-D
REVISION: 11
DATE: 2018/01/16

PART NUMBER	CONFIGURATION	QUANTITY PER CARTON (DU)
219562-0011	G+1P+15S+G	135

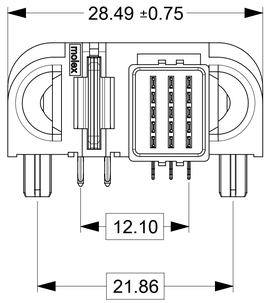

PART NUMBER	CONFIGURATION	QUANTITY PER CARTON (DU)
219562-0012	G+2P+15S+G	105

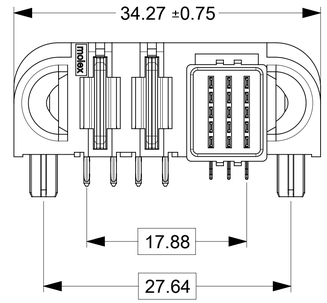

PART NUMBER	CONFIGURATION	QUANTITY PER CARTON (DU)
219562-0013	G+3P+15S+G	90

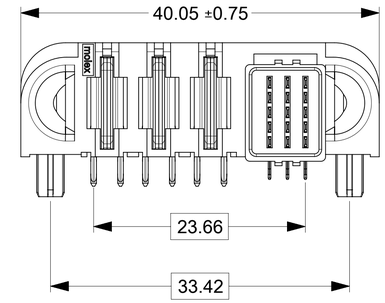

PART NUMBER	CONFIGURATION	QUANTITY PER CARTON (DU)
219562-0014	G+4P+15S+G	75

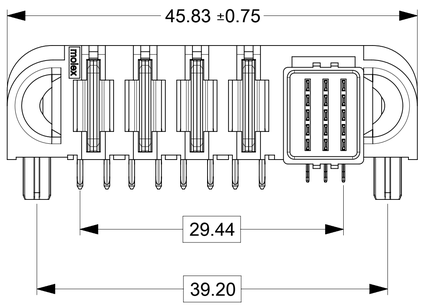

PART NUMBER	CONFIGURATION	QUANTITY PER CARTON (DU)
219562-0015	G+5P+15S+G	75

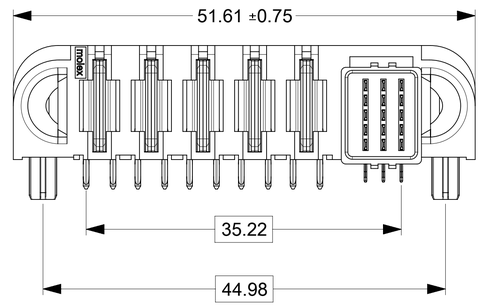

PART NUMBER	CONFIGURATION	QUANTITY PER CARTON (DU)
219562-0016	G+1P+30S+G	105

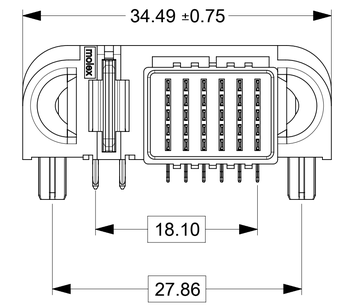

PART NUMBER	CONFIGURATION	QUANTITY PER CARTON (DU)
219562-0017	G+2P+30S+G	90

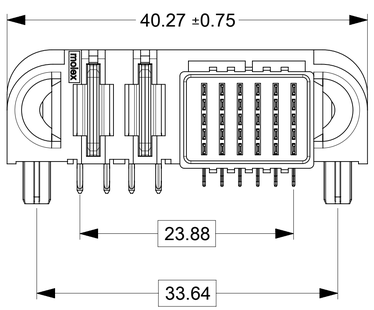

PART NUMBER	CONFIGURATION	QUANTITY PER CARTON (DU)
219562-0018	G+3P+30S+G	75

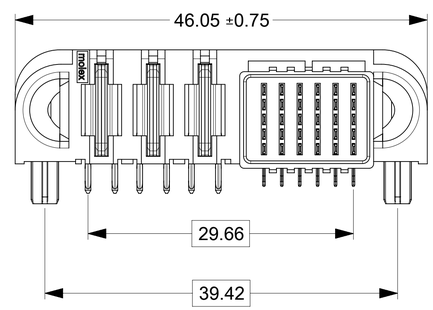

PART NUMBER	CONFIGURATION	QUANTITY PER CARTON (DU)
219562-0019	G+4P+30S+G	75

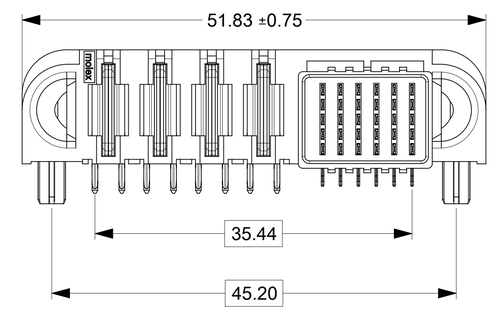

PART NUMBER	CONFIGURATION	QUANTITY PER CARTON (DU)
219562-0020	G+5P+30S+G	60

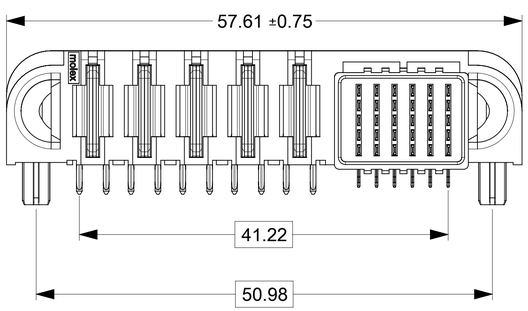

DOCUMENT STATUS	P1	RELEASE DATE	2023/04/11	17:04:40

THIS DRAWING CONTAINS INFORMATION THAT IS PROPRIETARY TO MOLEX ELECTRONIC TECHNOLOGIES, LLC AND SHOULD NOT BE USED WITHOUT WRITTEN PERMISSION

DIMENSION UNITS	SCALE
mm	3:1

GENERAL TOLERANCES (UNLESS SPECIFIED)

ANGULAR TOL	±	°
4 PLACES	±	
3 PLACES	±	
2 PLACES	±	0.25
1 PLACE	±	0.3
0 PLACES	±	

DRAFT WHERE APPLICABLE MUST REMAIN WITHIN DIMENSIONS

CURRENT REV DESC:

EC NO: 745288
DRWN: LZABJANOVSKI 2023/03/09
CHK'D: JAYK1 2023/04/10
APPR: JAYK1 2023/04/10

INITIAL REVISION:
DRWN: LZABJANOVSKI 2022/03/14
APPR: BPISZCZOR 2022/08/04

molex

GUARDIAN HD RA PLUG RIGHT SIGNAL WITH POWER PF

PRODUCT CUSTOMER DRAWING

DOCUMENT NUMBER	DOC TYPE	DOC PART	REVISION
2195629001-SD	PSD	000	A1

THIRD ANGLE PROJECTION	DRAWING	SERIES	MATERIAL NUMBER	CUSTOMER	SHEET NUMBER
	D-SIZE	219562	SEE CHART		2 OF 2

FORMAT Molex to pro/E
FORMAT VERSION
DATE 2001-03-01