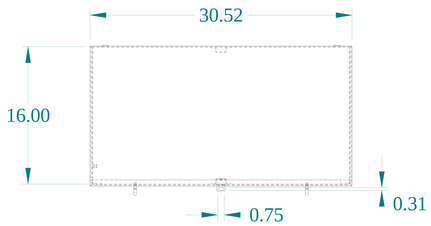

TOP VIEW

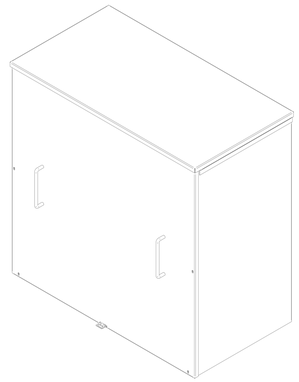

ISOMETRIC VIEWS

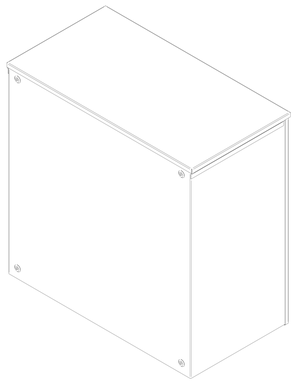

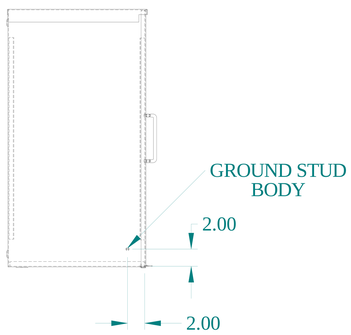

SIDE VIEW

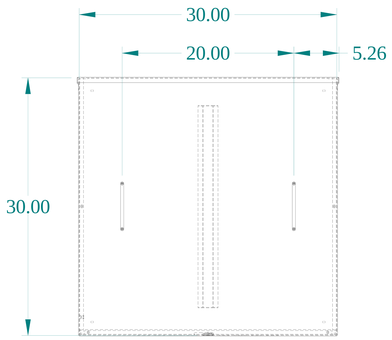

FRONT VIEW

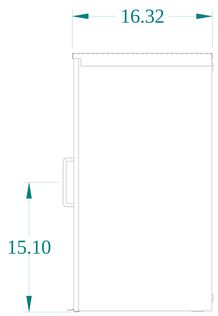

SIDE VIEW

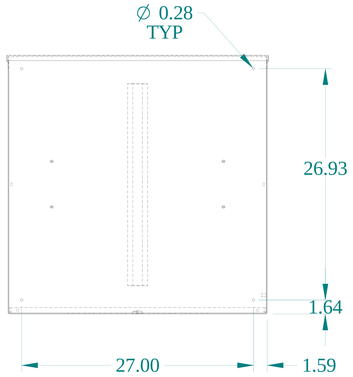

BACK VIEW

DETAIL Y
TYP

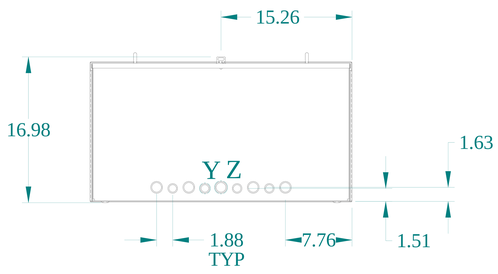

BOTTOM VIEW

DETAIL Z
TYP

HAMMOND MANUFACTURING®

www.hammondmfg.com

Data subject to change without notice.

Part # : C3R303016SC	Date : May. 29, 2023

Link:www.hammfg.com/C3R303016SC