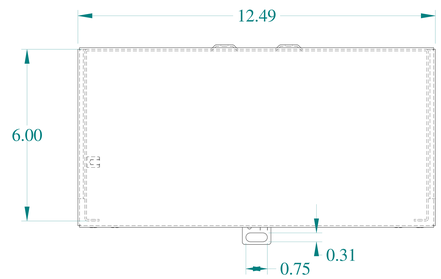


TOP VIEW

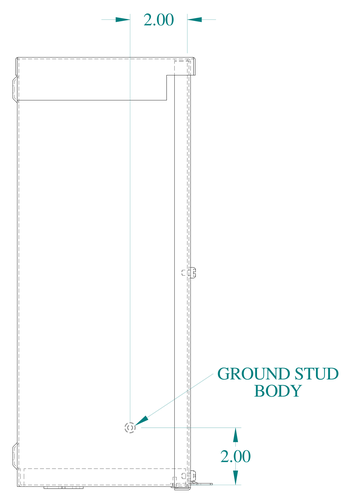


SIDE VIEW

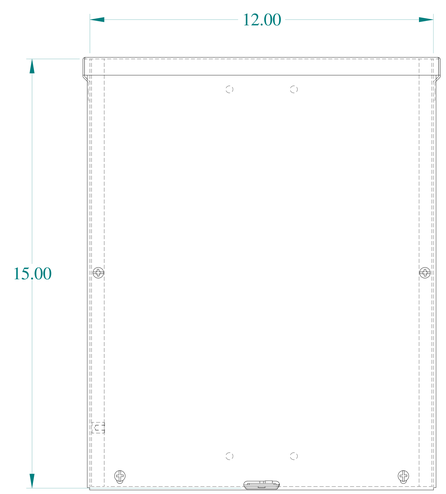


FRONT VIEW

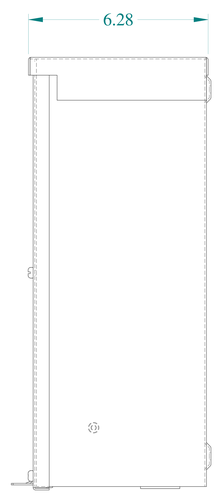


SIDE VIEW

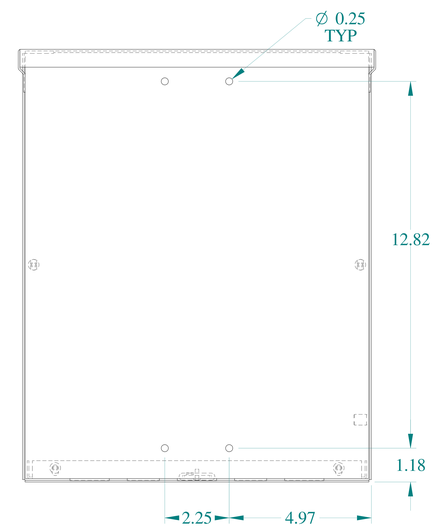


BACK VIEW

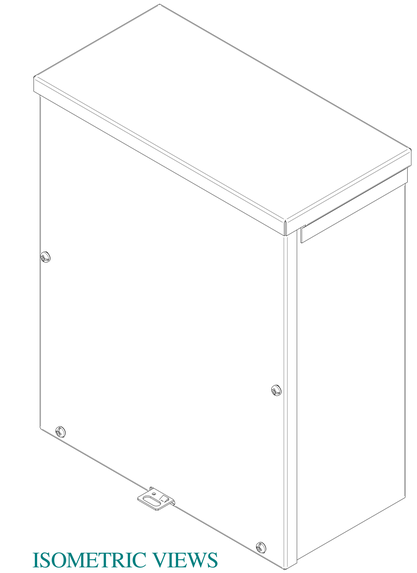

ISOMETRIC VIEWS

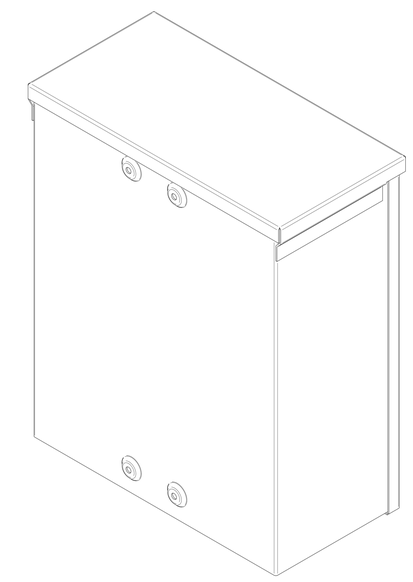

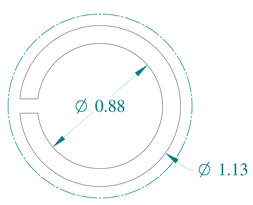


DETAIL Y
TYP

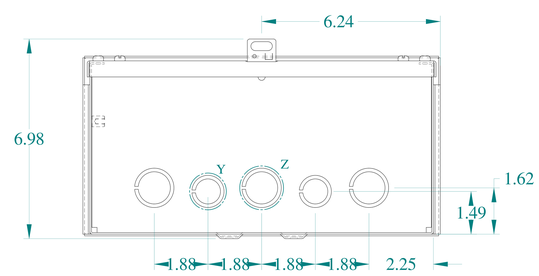


BOTTOM VIEW

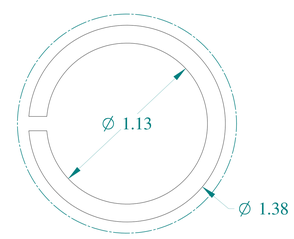


DETAIL Z
TYP

HAMMOND MANUFACTURING®

www.hammondmfg.com

Data subject to change without notice.

| | |
|---|---|
| Part # : C3R15126SC | Date : Mar. 24, 2019 |

Link:www.hammfg.com/C3R15126SC