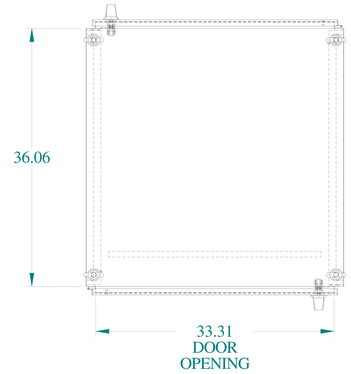

TOP VIEW

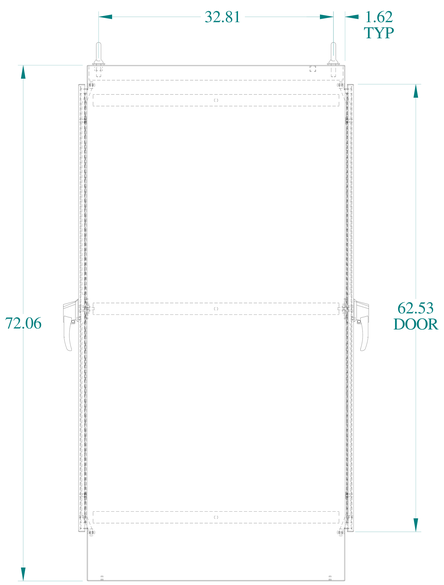

SIDE VIEW

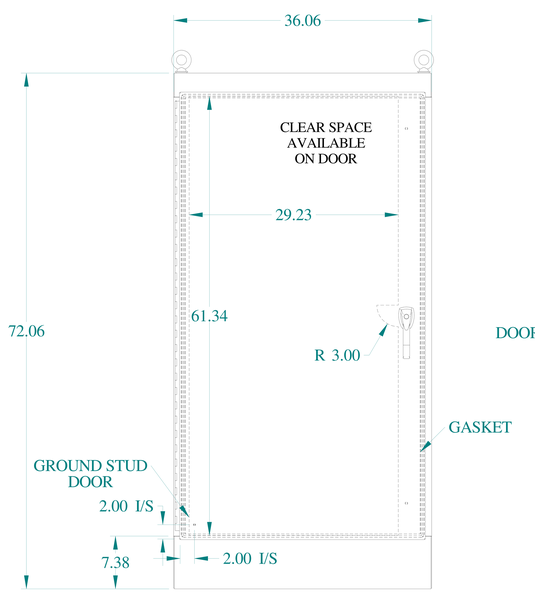

FRONT VIEW

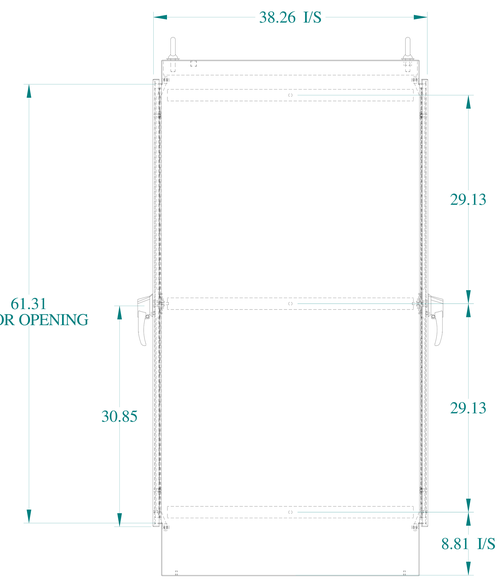

SIDE VIEW

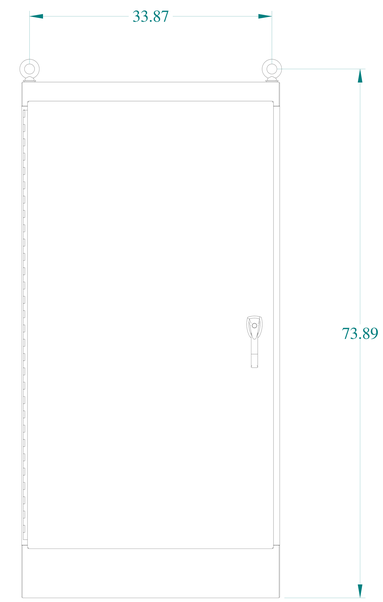

BACK VIEW

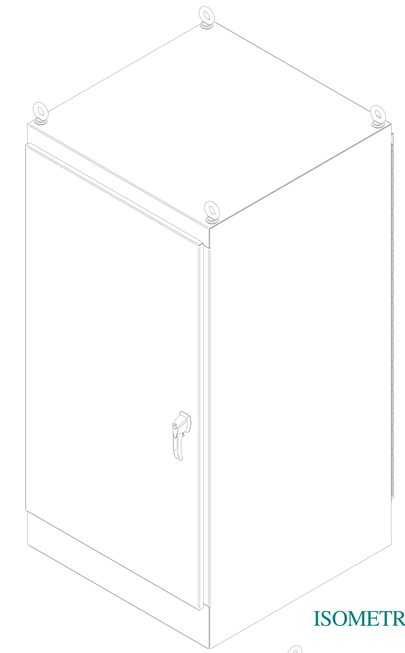

ISOMETRIC VIEWS

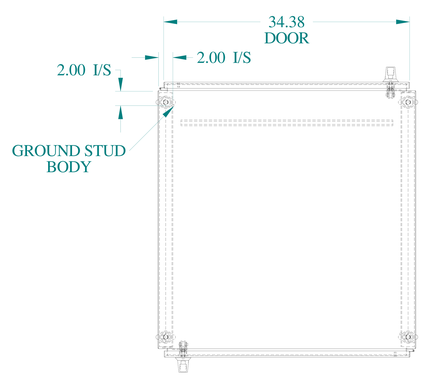

BOTTOM VIEW

HAMMOND MANUFACTURING®

www.hammondmfg.com

Data subject to change without notice.

Part # : HN4FS723636DASS	Date : Mar. 23, 2019

Link:www.hammfg.com/HN4FS723636DASS