© 2023 TE Connectivity. All Rights Reserved.

REVISIONS					
P	LTR	DESCRIPTION	DATE	DWN	APVD
	A	INITIAL RELEASE	16JUN2022	T.F	C.W

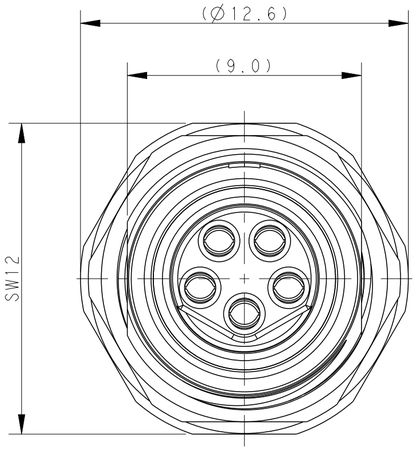

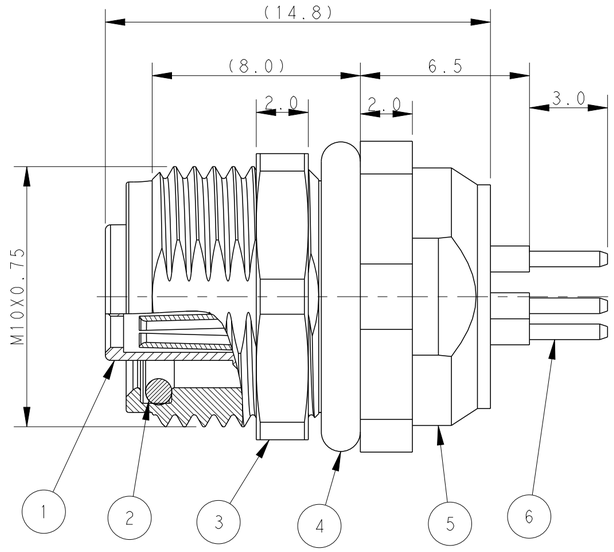

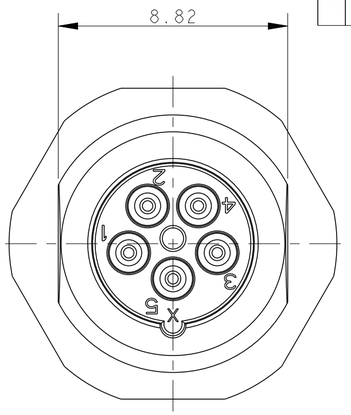

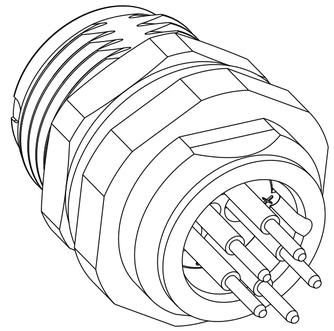

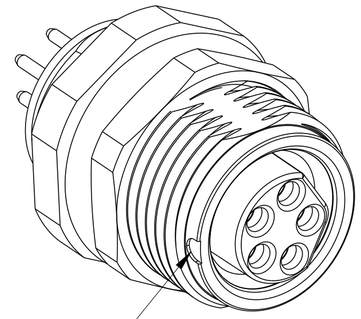

TABLE 1

TECHNICAL DATA	T4041417051-001
RATED VOLTAGE	60V
RATED CURRENT	3A
CONTACT RESISTANCE	≤10mΩ
INSULATION RESISTANCE	≥100MΩ
OVERVOLTAGE CATEGORY	II
MATERIAL GROUP	I
DEGREE OF PROTECTION	IP65
TEMPERATURE	-40°C~85°C

PIN ARRANGEMENT
B-CODE

T4041417051-001

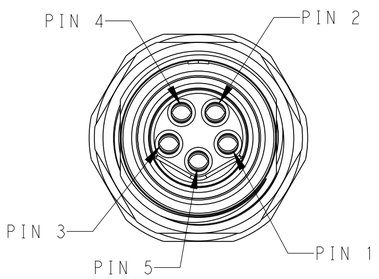

RECOMMENDED DRILLING DIAGRAM
(PCB THICKNESS 1.6mm MAX)

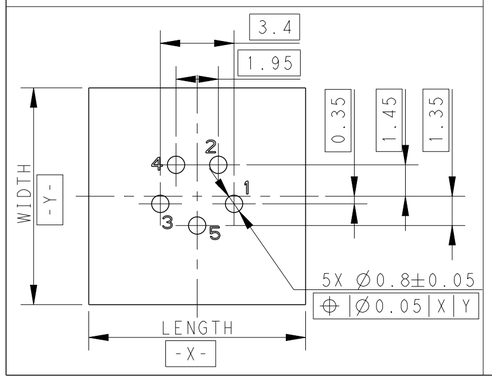

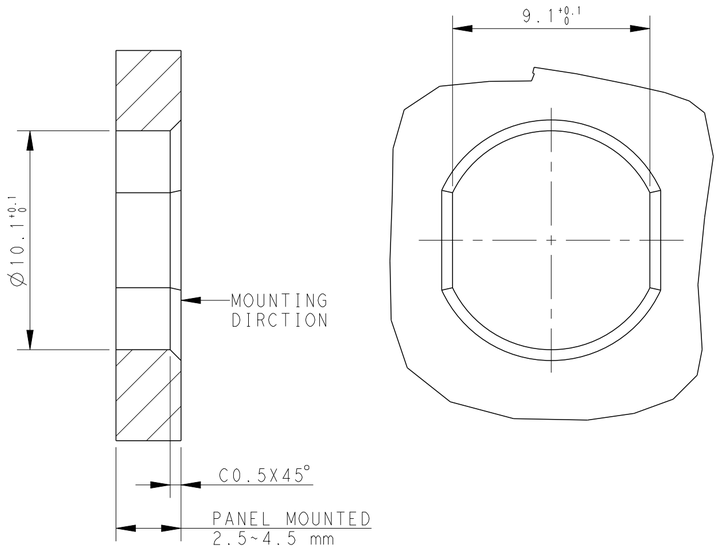

HOUSING CUTOUT FOR M10 FASTENING THREAD,
MOUNTING PANEL WITH FEEDTHROUGH HOLE
(ALTERNATIVELY WITH AREA AS ANTI-ROTATION
PROTECTION FOR PANEL THICKNESSES>2.5MM
UP TO MAX.4.5MM)

RECOMMENDED PANEL CUTOUT

NOTES:

1. TECHNICAL DATA: SEE TABLE 1
2. PACKING: 24 PIECES IN A TRAY, 384 PIECES IN AN OUTER BOX, TO BE PACKAGED AS PACKAGING SPECIFICATION

注意事项
1. 技术参数：见表1
2. 包装：每个吸塑盒装24PCS，每箱装384PCS

T4041417051-001	RPC-M8-FF-5CON-M10-LBUB	M8 PANEL MOUNTED CONNECTOR REAR MOUNTING, FEMALE		
TE PN	TYPE	DESCRIPTION		
GOLD PLATED	BRONZE	CONTACT	6	5
NICKEL PLATED	BRASS	METAL BODY	5	1
-	RUBBER	O-RING	4	1
NICKEL PLATED	BRASS	NUT	3	1
SHORE A 70 (Ø1.0X6.5)	RUBBER	O-RING	2	1
BLACK	PA, UL94-V0	HOUSING	1	1
COMMENT	MATERIAL	DESCRIPTION	ITEM	T4041417051-001

THIS DRAWING IS A CONTROLLED DOCUMENT.

DIMENSIONS: mm

TOLERANCES UNLESS OTHERWISE SPECIFIED:
0 PLC ±-
1 PLC ±-
2 PLC ±-
3 PLC ±-
4 PLC ±-
ANGLES ±-

MATERIAL -
FINISH -

DWN TONY FAN 16JUN2022
CHK CHRIS WANG 16JUN2022
APVD CHRIS WANG 16JUN2022
PRODUCT SPEC 108-106126
APPLICATION SPEC 114-137144-1
WEIGHT -

TE Connectivity

NAME M8 B CODE PANEL MOUNT CONNECTOR REAR MOUNTING, FEMALE

SIZE A2 | CAGE CODE 00779 | DRAWING NO C-T4041417051001 | RESTRICTED TO -

CUSTOMER DRAWING | SCALE 5:1 | SHEET 1 OF 1 | REV A

1471-9 (3/13)