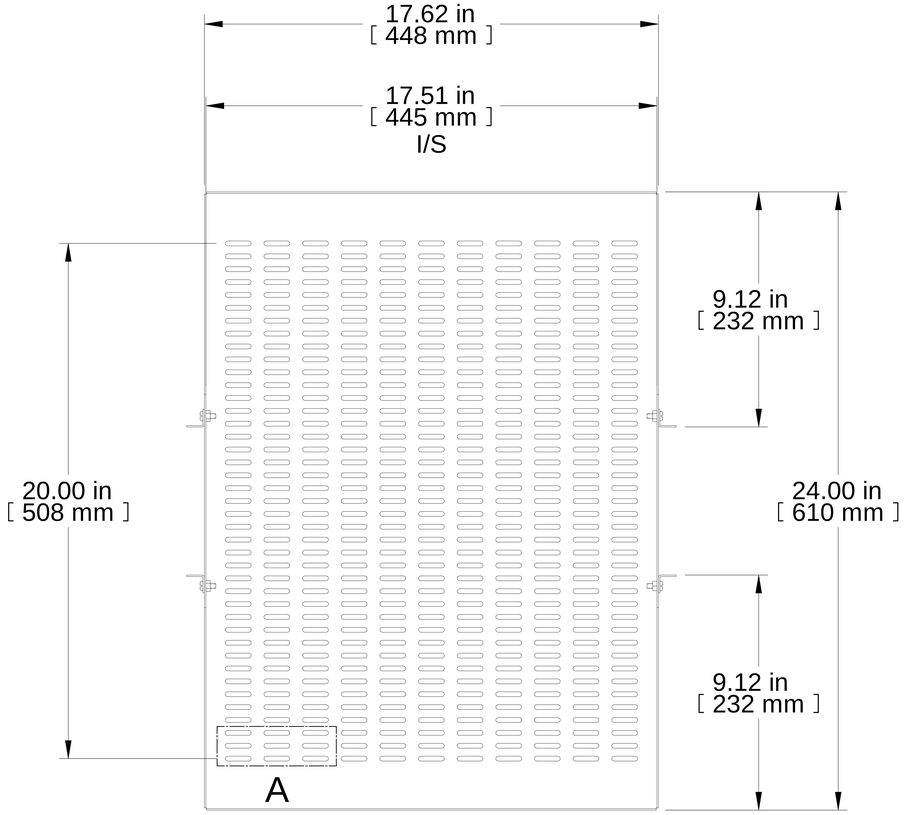

TOP VIEW

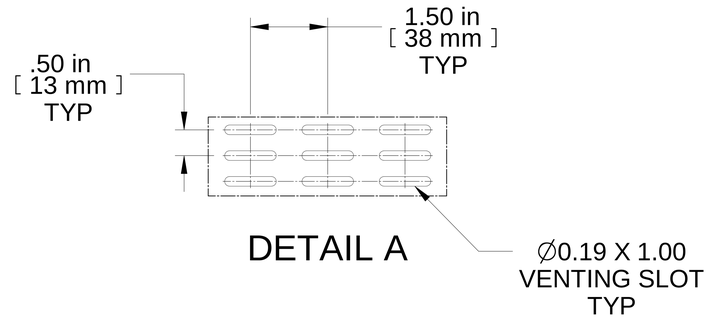

DETAIL A

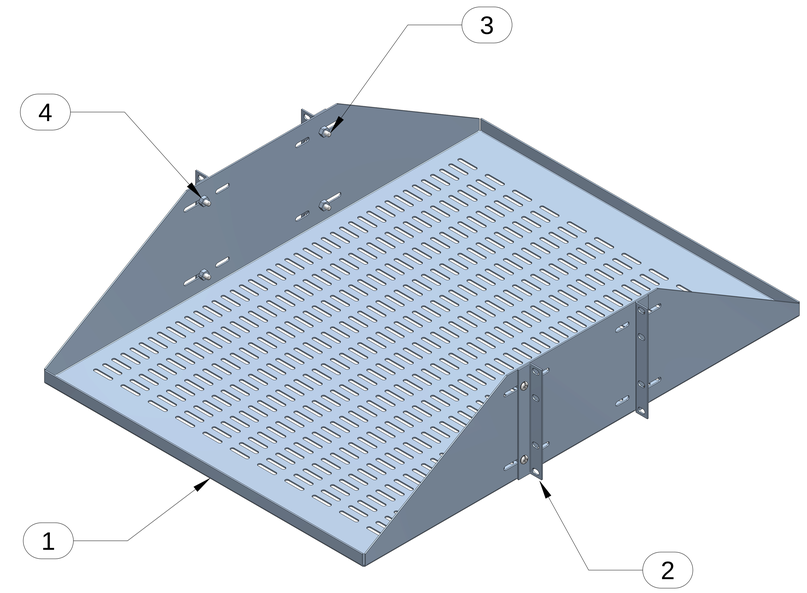

ISOMETRIC

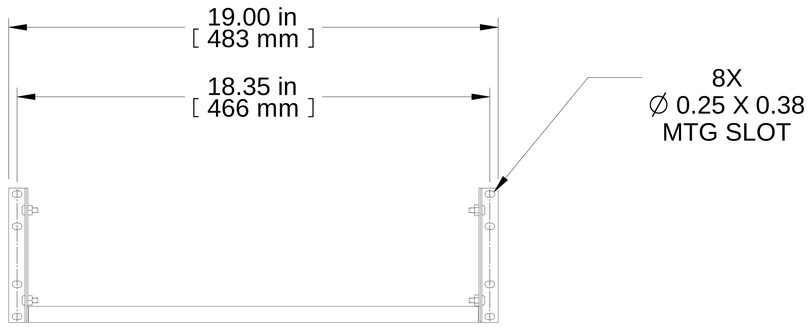

FRONT VIEW

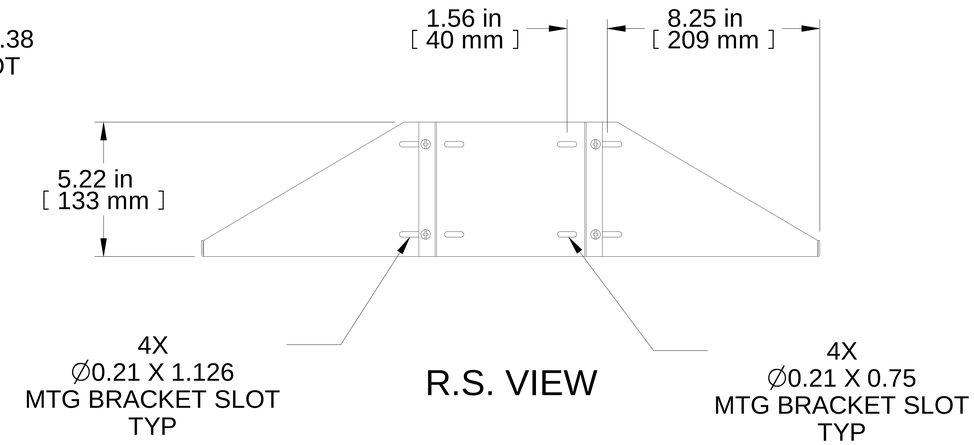

R.S. VIEW

Item Number	Title	Quantity
1	DNRM - VENTED SHELF	1
2	DNRM - MTG BRACKET	4
3	SCREW 10-32 X 1/2	8
4	10-32 KEP NUT	8

PART NUMBERS

DNRMV1924BK1	PAINTED BLACK TEXTURED

NOTES

Maximum Weight Load Capacity: 275 lb
Mounting Hardware Included for 10-32 & 12-24 Rails
See Hammond Website for More Information

Français

Pour tous les détails sur nos produits,
svp veuillez consulter notre site www.hammondmfg.com

Data subject to change without notice. Isometric drawing not to scale.
Les données sont sujettes à changement sans préavis.

HAMMOND MANUFACTURING®

www.hammondmfg.com

PART NO. **DNRMV1924**