TOP VIEW

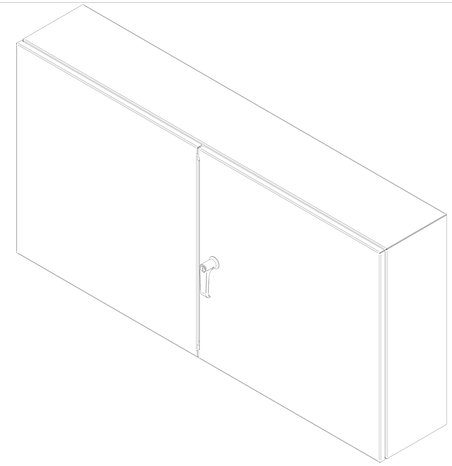

ISOMETRIC VIEWS

SIDE VIEW

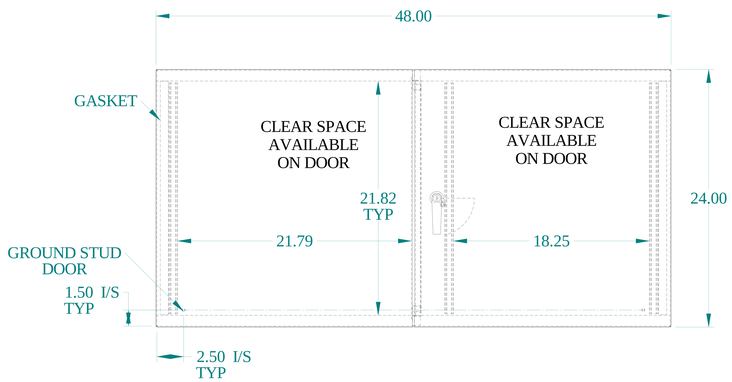


FRONT VIEW

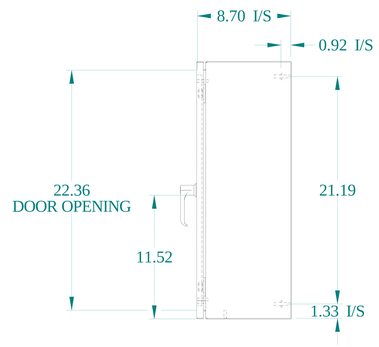


SIDE VIEW

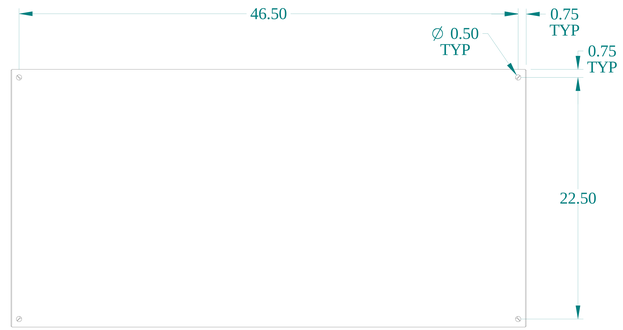


BACK VIEW

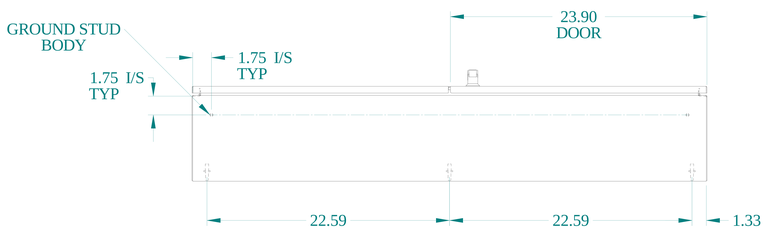


BOTTOM VIEW

HAMMOND MANUFACTURING®

www.hammondmfg.com

Data subject to change without notice.

| | |
|---|---|
| Part # : EN4TD24488LG | Date : Feb. 21, 2023 |

Link:www.hammfg.com/EN4TD24488LG