DRG No.	ISSUE	TYPE No.	DIM. IN:	ODC:QA:40077 ISSUE 4
CP13368	9	SLT/P/–	MILLIMETRES	DO NOT SCALE

THIS DRAWING AND THE COPYRIGHT AND DESIGN RIGHT THEREIN ARE THE PROPERTY OF OXLEY DEVELOPMENTS CO. Ltd. AND MUST NOT BE REPRODUCED OR DISCLOSED TO A THIRD PARTY WITHOUT PRIOR WRITTEN CONSENT OF THE COMPANY.

ISS	MODIFICATION	DATE
9	CHANGE No. 98/538	15.12.98

CHARACTERISTICS :

CONFIGURATION : PI–SECTION
MAXIMUM DIRECT or LOW FREQUENCY CURRENT : 10A
WORKING VOLTAGE : 200Vdc

TYPE No.	MINIMUM CAPACITANCE at 1KHz, 25°C	TYPICAL INSERTION LOSS (dB) *			
		10MHz	100MHz	1GHz	10GHz
SLT/P/680	680pF	4	35	70	–
SLT/P/1500	1500pF	5	45	70	70
SLT/P/5000	5000pF	20	65	70	70
SLT/P/6000/CT	CAPACITANCE READING 4800pF to 7200pF at 1KHz, 25°C	20	65	70	70

* MEASURED TO MIL–STD 220A USING A MARCONI INSTRUMENTS SPECTRUM ANALYSER TYPE TF2370/TK2373

RECOMMENDED MOUNTING HOLE : ø4

FINISH :

EYELET : SILVER
TERMINATIONS (FEEDTHROUGH) : TIN–LEAD or SILVER
SOLDERABILITY EXCEEDS REQUIREMENTS OF BS2011 (IEC 68) TEST T

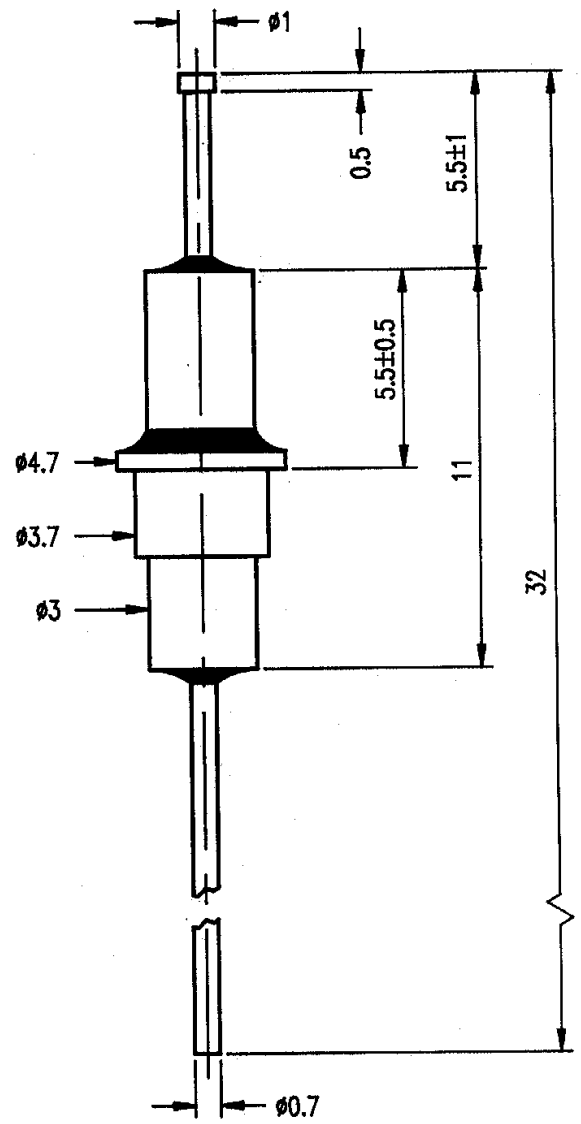

ACTUAL SIZE

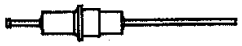

© COPYRIGHT OXLEY DEVELOPMENTS Co. Ltd. 1993

MATERIAL	DRAWN
———	T. DAVIS
FINISH	CHECKED
SEE NOTE	Simon Russam
PLATING	APPROVED
———	93/383
TOLERANCE	DATE
———	10.12.93

REMARKS

TITLE
RFI SUPPRESSION FILTER (PI–SECTION) : EYELET TYPE

OXLEY
Tel.0229 582621
Fax.0229 585090
Telex.65141
OXLEY DEVELOPMENTS COMPANY LTD.
Ulverston
Cumbria LA12 9QG
ENGLAND

SCALE	TYPE No.	DRG No.	ISSUE
5 : 1	SLT/P/–	CP13368	9