THESE DRAWINGS AND SPECIFICATIONS ARE THE PROPERTY OF SAFT LTD SOUTH SHIELDS AND SHALL NOT BE REPRODUCED OR COPIED OR USED AS THE BASIS FOR THE MANUFACTURE OR SALES OF APPARATUS WITHOUT PERMISSION

DWG NO: 0095-837-019 F | TITLE: LS175003PF | PROJECTION:

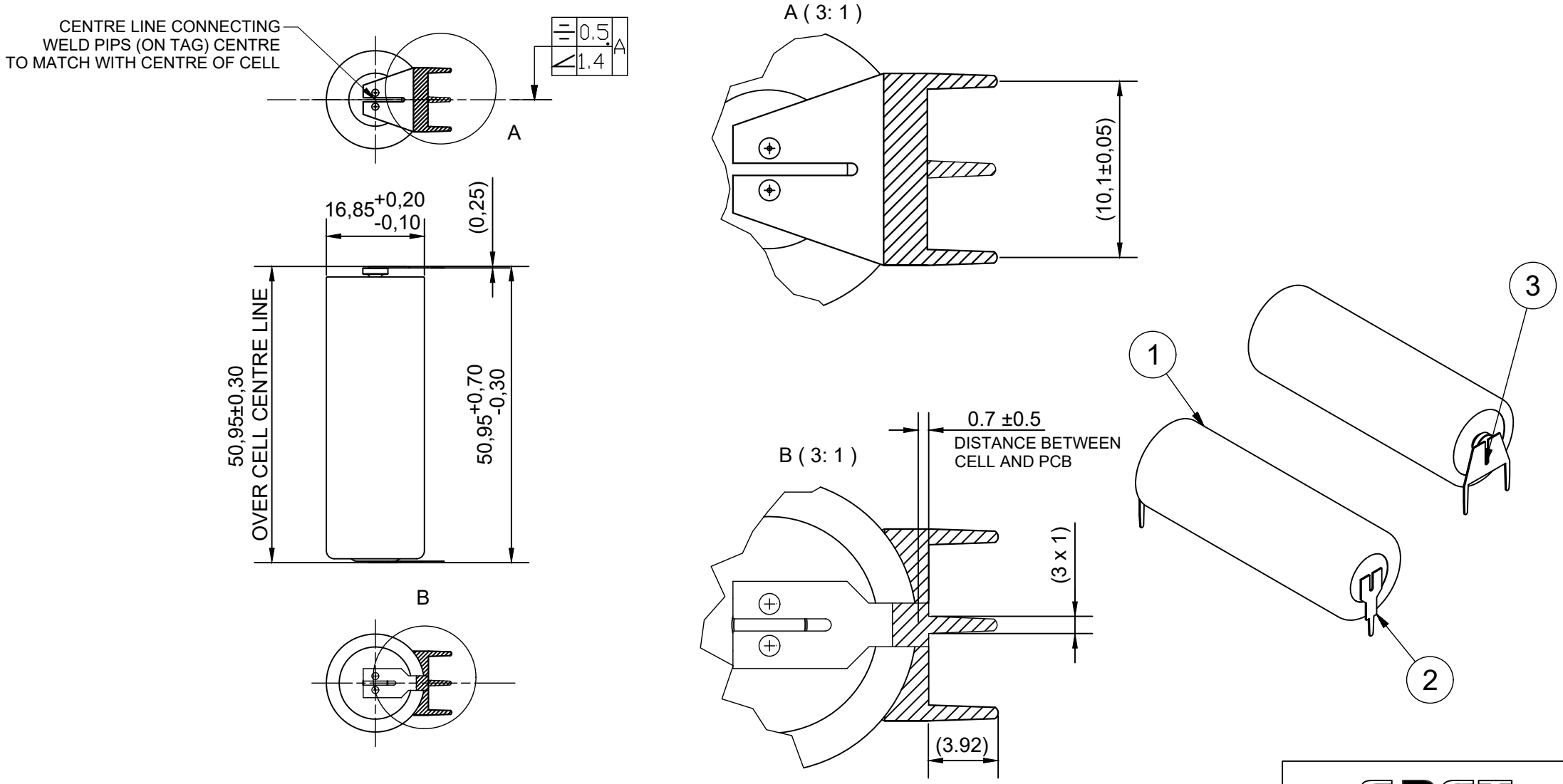

SAFT LTD, RIVER DRIVE, SOUTH SHIELDS,
TYNE & WEAR. NE33 2TR
TEL: 0191 4561451 FAX: 0191 4566383

REV	REV	REV	REV	REV	REV	REV
REV	REV	REV	REV	REV	REV	REV – 13.11.23 A
						FIRST ISSUE

SCALE:	1:1	MATERIAL:	SEE BOM
DRN BY:	A.J.	USED ON:	
CHK BY:	–	SHEET NO:	1
DATE:	13.11.23	DWG NO:	0095-837-019 F

GENERAL TOLERANCE: 0=`0.35 0.0+`0.1 ANGLE:`0.5~ ALL DIMS IN MM